Branching random walks in random environment and super-Brownian motion in random environment

Makoto Nakashima *

Abstract

We focus on the existence and characterization of the limit for a certain critical branching random walks in time-space random environment in one dimension which was introduced in [2]. Each particle performs simple random walk on $\mathbb{Z}$ and branching mechanism depends on the time-space site. The limit of this measure-valued processes is characterized as the unique solution to the non-trivial martingale problem and called super-Brownian motion in a random environment in [19].

AMS 2000 Subject Classification: Primary 60H15, 60J68, 60J80, 60K37

Key words: Superprocesses in a random environment, Branching random walks in a random environment, Stochastic heat equations, Uniqueness

We denote by $(\Omega, \mathcal{F}, P)$ a probability space. Let $\mathbb{N} = \{0, 1, 2, \cdots\}$, $\mathbb{N}^* = \{1, 2, 3, \cdots\}$, and $\mathbb{Z} = \{0, \pm 1, \pm 2, \cdots\}$. Let $C_{x_1, \cdots, x_p}$ or $C(x_1, \cdots, x_p)$ be a non-random constant which depends only on the parameters $x_1, \cdots, x_p$.

1 Introduction

Super-Brownian motion(SBM) is a measure-valued process which was introduced by Dawson and Watanabe independently[4, 30] and is obtained as the limit of (asymptotically) critical branching Brownian motions (or branching random walks). There are many books for introduction of super-Brownian motion [6, 10] and dealing with several aspects of it [8, 9, 15, 25]. Also, super-Brownian motion appears in physics and population genetics.

An example of the construction is the following, where we always treat Euclidean space as the space, $\mathbb{R}^d$ in this paper. We assume that at time 0, there are N particles in $\mathbb{Z}^d$ as the 0-th generation particle. Each of N particles chooses independently of each other a nearest neighbor site uniformly, moves there at time 1, and then each particle independently of each other either dies or splits into two particles with probability 1/2 (1st generation). The newly produced particles in the n-th generation perform in the same manner, that is each of them chooses independently of each other a nearest neighbor site uniformly,

*nakamako@math.tsukuba.ac.jp, Division of Mathematics, Graduate School of Pure and Applied Sciences,University of Tsukuba, 1-1-1 Ten-noudai, Tsukuba-shi, Ibaraki-ken, Japan

moves there at time $n+1$, and then each particle independently of each other either dies or splits into 2 particles with probability 1/2.

Let $X_t^{(N)}(\cdot)$ be the measure-valued Markov processes defined by

$$X_t^{(N)}(B) = \frac{\sharp\left\{\text{particles in } B\sqrt{N} \text{ at } \lfloor tN \rfloor\text{-th generation at time } tN\right\}}{N},$$

where $B \in \mathcal{B}(\mathbb{R}^d)$ are Borel sets in $\mathbb{R}^d$ and $B\sqrt{N} = \{x = y\sqrt{N} \text{ for } y \in B\}$. Then, under some conditions, they converge as $N \to \infty$ to a measure-valued processes, *super-Brownian motion*. In particular, the limit, X_t, is characterized as the unique solution to the martingale problem:

$$\begin{cases} \text{For all } \phi \in C_b^2(\mathbb{R}), \\ \qquad Z_t(\phi) := X_t(\phi) - X_0(\phi) - \displaystyle\int_0^t \frac{1}{2d} X_s\left(\Delta\phi\right) ds \\ \text{is an } \mathcal{F}_t^X\text{-continuous square-integrable martingale} \\ \qquad Z_0(\phi) = 0 \ \text{ and } \ \langle Z(\phi)\rangle_t = \displaystyle\int_0^t X_s(\phi^2) ds, \end{cases} \tag{1.1}$$

where $\nu(\phi) = \int \phi d\nu$ for any measure ν.

It is a well-known fact that one-dimensional super-Brownian motion is related to a stochastic heat equation([14, 26]). When $d = 1$, super-Brownian motion $X_t(dx)$ is almost surely absolutely continuous with respect to the Lebesgue measure and its density $u(t,x)$ satisfies the following stochastic heat equation:

$$\frac{\partial}{\partial t} u = \frac{1}{2}\Delta u + \sqrt{u}\dot{W}(t,x),$$

where $\dot{W}(t,x)$ is time-space white noise. On the other hand, for $d \geq 2$, $X_t(\cdot)$ is almost surely singular with respect to the Lebesgue measure ([7, 16, 23, 24]).

In this paper, we consider super-Brownian motion in a random environment, which was introduced in [19]. Mytnik showed the existence and uniqueness of the scaling limit $X_t(\cdot)$ for a certain critical branching diffusion in a random environment with some conditions. It is characterized as the unique solution to the martingale problem:

$$\begin{cases} \text{For all } \phi \in C_b^2(\mathbb{R}^d), \\ \qquad Z_t(\phi) := X_t(\phi) - X_0(\phi) - \displaystyle\int_0^t \frac{1}{2} X_s\left(\Delta\phi\right) ds \\ \text{is an } \mathcal{F}_t^X\text{-continuous square-integrable martingale and} \\ \qquad \langle Z(\phi)\rangle_t = \displaystyle\int_0^t X_s(\phi^2) ds + \int_0^t \int_{\mathbb{R}^d\times\mathbb{R}^d} g(x,y)\phi(x)\phi(y) X_s(dx) X_s(dy) ds, \end{cases} \tag{1.2}$$

where $g(\cdot,\cdot)$ is bounded continuous function in a certain class. In this paper, we construct a super-Brownian motion in a random environment as the limit of scaled branching random walks in a random environment, which is a solution to (1.2) for the case where $g(x,y)$ is replaced by $\delta_{x,y}$ and $d = 1$. The definition of such a martingale problem is formal. The rigorous definition will be given later.

2 Branching random walks in a random environment

Before giving the system of the branching random walks in a random environment, we introduce the Ulam-Harris tree $\mathcal{T}$ for labeling the particles. We set $T_k = (\mathbb{N}^*)^{k+1}$ for $k \geq 1$. Then, the Ulam-Harris tree $\mathcal{T}$ is defined by $\mathcal{T} = \bigcup_{k\geq 0} T_k$.

We will give a name to each particle by using elements of $\mathcal{T}$.

i) When there are M particles at the 0-th generation, we label them as $1, 2, \cdots, M \in T_0$.

ii) If the n-th generation particle $\mathbb{x} = (x_0, \cdots, x_n) \in T_n$ gives birth to $k_{\mathbb{x}}$ particles, then we name them as $(x_0, \cdots, x_n, 1), \cdots, (x_0, \cdots, x_n, k_{\mathbb{x}}) \in T_{n+1}$.

Thus, every particle in the branching systems has its own name in $\mathcal{T}$. We define $|\mathbb{x}|$ by its generation, that is if $\mathbb{x}$ is an element of T_k, then $|\mathbb{x}| = k$. For convenience, we denote by $|\mathbb{x} \wedge \mathbb{y}|$ the generation of the closest common ancestor of $\mathbb{x}$ and $\mathbb{y}$. If $\mathbb{x}$ and $\mathbb{y}$ have no common ancestor, then we define $|\mathbb{x} \wedge \mathbb{y}| = -\infty$. Also, we denote by $\mathbb{y}/\mathbb{x}$ the last digit of $\mathbb{y}$ when $\mathbb{y}$ is a child of $\mathbb{x}$, that is

$$\mathbb{y}/\mathbb{x} = \begin{cases} k_{\mathbb{y}}, & \text{if } \substack{\mathbb{x}=(x_0,\cdots,x_n)\in T_n,\\ \mathbb{y}=(x_0,\cdots,x_n,k_{\mathbb{y}})\in T_{n+1},} \\ \infty, & \text{otherwise.} \end{cases} \quad \text{for some } n \in \mathbb{N},$$

Now, we give the definition of branching random walks in a random environment. In our case, a particle moves on $\mathbb{Z}$ and the process evolves by the following rules:

i) The initial particles are located at sites $\{x_i \in 2\mathbb{Z} : i = 1, \cdots, M_N\}$.

ii) Each particle located at site x at time n chooses a nearest neighbor site independently of each others with probability $\frac{1}{2}$ and moves there at time $n+1$. Then, it is replaced by k-children with probability $q_{n,x}^{(N)}(k)$ independently of each others,

where $\left\{\left\{q_{n,x}^{(N)}(k)\right\}_{k=0}^{\infty} : (n,x) \in \mathbb{N} \times \mathbb{Z}\right\}$ are the offspring distributions assigned to each time-space site (n,x) which are i.i.d. in (n,x). We denote by $B_n^{(N)}$ and by $B_{n,x}^{(N)}$ the total number of particles at time n and the local number of particles at site x at time n. Also, we denote by $m_{n,x}^{(N,p)}$ the p-th moment of offsprings for offspring distribution $\{q_{n,x}^{(N)}(k)\}$, that is

$$m_{n,x}^{(N,p)} = \sum_{k=0}^{\infty} k^p q_{n,x}^{(N)}(k).$$

This model is called branching random walks in a random environment (BRWRE) whose properties as measure-valued processes are studied well for "supercritical" case[12, 13]. Also, the continuous counterpart, branching Brownian motions in a random environment was introduced by Shiozawa[28, 29]. We know that the normalized random measure weakly converges to Gaussian measure in probability in one phase, whereas the localization has occurred in the other phase.

In this paper, we focus on the scaled measure-valued processes $X_t^{(N)}$ associated to this branching random walks:

$$X_0^{(N)} = \frac{1}{N}\sum_{i=0}^{M_N} \delta_{x_i/N^{\frac{1}{2}}},$$

and

$$X_t^{(N)} = \frac{1}{N}\sum_{i=1}^{B_{tN}^{(N)}} \delta_{x_i(t)/N^{\frac{1}{2}}}, \quad \text{for } t = \frac{1}{N}, \cdots, \frac{\lfloor KN \rfloor}{N} \text{ for each } K > 0,$$

where $x_i(t)$ is the position of the i-th particle at tN-th generation. We remark that if we identify $B_{tN,x}^{(N)}$ as the measure $B_{tN,x}^{(N)}\delta_x$, then $X_t^{(N)}$ is represented as

$$X_t^{(N)} = \frac{1}{N}\sum_{x\in\mathbb{Z}} B_{tN,x}^{(N)}\delta_{x/N^{\frac{1}{2}}} \quad \text{for } t = \frac{1}{N}, \cdots, \frac{\lfloor KN \rfloor}{N}.$$

Let $\mathcal{M}_F(\mathbb{R})$ be the set of the finite measures on $\mathbb{R}$ with the topology of weak convergence. For convenience, we extend this model to the càdlàg paths in $\mathcal{M}_F(\mathbb{R})$ by

$$X_t^{(N)} = \frac{1}{N}\sum_{x\in\mathbb{Z}} B_{\underline{t}N,x}^{(N)}\delta_{x/N^{\frac{1}{2}}}, \quad \text{for } \underline{t} \le t < \underline{t} + \frac{1}{N},$$

where we define $\underline{t}$ for t and N by some positive number $\frac{i}{N}$ for $i \in \mathbb{N}$ satisfying $\frac{i}{N} \le t < \frac{i+1}{N}$. Then, $X_t^{(N)} \in \mathcal{M}_F(\mathbb{R})$ for each $t \in [0, K]$. Let $\phi \in \mathcal{B}_b(\mathbb{R})$, where $\mathcal{B}_b(\mathbb{R})$ is the set of the bounded Borel measurable functions on $\mathbb{R}$. We denote the product of $\nu \in \mathcal{M}_F(\mathbb{R})$ and $\phi \in \mathcal{B}_b(\mathbb{R})$ by $\nu(\phi)$, that is

$$\nu(\phi) = \int_{\mathbb{R}} \phi(x)\nu(dx).$$

To describe the main theorem, we introduce the following assumption on the environment:

Assumption A

$$E[m_{0,0}^{(N,1)}] = E\left[\sum_{k=0}^{\infty} k\, q_{n,x}^{(N)}(k)\right] = 1, \lim_{N\to\infty} E\left[m_{0,0}^{(N,2)} - 1\right] = \gamma > 0,$$
$$\sup_{N\ge1} E\left[m_{0,0}^{(N,4)}\right] < \infty, \lim_{N\to\infty} N^{\frac{1}{2}} E\left[(m_{0,0}^{(N,1)} - 1)^2\right] = \beta^2,$$
$$\sup_{N\ge1} N^{\frac{1}{2}} E\left[(m_{0,0}^{(N,1)} - 1)^4\right] < \infty.$$

Example: The simplest example satisfying Assumption A is the case where $q_{n,x}^{(N)}(0) = \frac{1}{2} - \frac{\beta\xi(n,x)}{2N^{\frac{1}{4}}}, q_{n,x}^{(N)}(2) = \frac{1}{2} + \frac{\beta\xi(n,x)}{2N^{\frac{1}{4}}}$ for i.i.d. random variables $\{\xi(n,x) : (n,x) \in \mathbb{N}\times\mathbb{Z}\}$ such that $P(\xi(n,x) = 1) = P(\xi(n,x) = -1) = \frac{1}{2}$.

Theorem 2.1. *We suppose that $X_0^{(N)}(\cdot) \Rightarrow X_0(\cdot)$ in $\mathcal{M}_F(\mathbb{R})$ and Assumption A. Then, the sequence of measure-valued processes $\left\{X_\cdot^{(N)} : N \in \mathbb{N}\right\}$ converges to a continuous measure-valued process $X_\cdot \in C([0,\infty), \mathcal{M}_F(\mathbb{R}))$. Moreover, for any $t > 0$, $X_t(dx)$ is almost surely absolutely continuous with respect to the Lebesgue measure and its density $u(t,x)$ is the unique nonnegative solution to the following martingale problem:*

$$\begin{cases} \text{For all } \phi \in C_b^2(\mathbb{R}), \\ \qquad Z_t(\phi) = \displaystyle\int_{\mathbb{R}} \phi(x)u(t,x)dx - \int_{\mathbb{R}} \phi(x)X_0(dx) - \frac{1}{2}\int_0^t \int_{\mathbb{R}} \Delta\phi(x)u(s,x)dxds \\ \text{is an } \mathcal{F}_t^X\text{-continuous square-integrable martingale and} \\ \qquad \langle Z(\phi)\rangle_t = \displaystyle\int_0^t \int_{\mathbb{R}} \phi^2(x)\left(\gamma u(s,x) + 2\beta^2 u(s,x)^2\right) dxds. \end{cases} \tag{2.1}$$

Remark 1: We found in the Example after Assumption A that the fluctuation of the environment is mainly given by $(m_{n,x}^{(N,1)} - 1)$ and scaling factor is $N^{-\frac{1}{4}}$. (It appears clearly in the Example after Assumption A.) This scaling factor is different from $N^{-\frac{1}{2}}$, the one in [19]. When the scaling factor is $N^{-\frac{1}{2}}$, the limit is the usual super-Brownian motion (1.1).

We roughly discuss how the scaling factor in our model is determined. For simplicity, we consider the model for the case where the environment is the one given in the Example.

We scale the space by $N^{-\frac{1}{2}}$. Then, the summation of the fluctuation of the first moment of offsprings in the segment $\{k\} \times [x,y]$ is $\displaystyle\sum_{z \in [xN^{1/2}, yN^{1/2}]} \frac{\beta\xi(k,z)}{N^{\frac{1}{4}}}$. Since it is the summation of i.i.d. random variables of $\frac{(y-x)N^{\frac{1}{2}}}{2}$, the central limit theorem holds and it weakly converges to a Gaussian random variable with distribution $N(0, \frac{\beta^2(y-x)}{2})$. Similar argument holds for random variables other than Bernoulli random variables.

Remark 2: The martingale problem (2.1) is the rigorous definition of the martingale problem when $g(x,y)$ is replaced by δ_{x-y} in (1.2). Also, the theorem implies the existence and the uniqueness of the nonnegative solution to the stochastic heat equation

$$\frac{\partial}{\partial t}u = \frac{1}{2}\Delta u + \sqrt{\gamma u + 2\beta^2 u^2}\dot{W}, \tag{2.2}$$

and $\lim_{t\to+0} u(t,x)dx = X_0(dx)$ in $\mathcal{M}_F(\mathbb{R})$, where $\dot{W}$ is time-space white noise. In [18], the existence of solutions was proved for general SPDE containing (2.2) when the initial measure $X_0(dx)$ has a continuous density with rapidly decreasing at infinity.

Also, there are a lot of papers on uniqueness of the stochastic heat equation $\frac{\partial}{\partial t}u = \frac{1}{2}\Delta u + |u|^\alpha \dot{W}$. It is known that weak uniqueness for nonnegative solutions holds for $\frac{1}{2} \le \alpha \le 1$ [20] and pathwise uniqueness holds for $\frac{3}{4} < \alpha \le 1$ [21]. However, uniqueness in law and pathwise uniqueness fails when solutions are allowed to take negative values for $\alpha < \frac{3}{4}$ [17].

3 Proof of Theorem 2.1

In this section, we will give a proof of Theorem 2.1. The proof is divided into three steps:

i) Tightness.

ii) Identification of the limit point processes.

iii) Weak uniqueness of the limit points.

In this section, we consider the following setting for simplicity.

Assumption B: The number of initial particles is N and all of them locates at the origin at time 0. Also, $q^{(N)}_{n,x}(0) = \dfrac{1}{2} - \dfrac{\beta\xi(n,x)}{2N^{\frac{1}{4}}}, q^{(N)}_{n,x}(2) = \dfrac{1}{2} + \dfrac{\beta\xi(n,x)}{2N^{\frac{1}{4}}}$ for i.i.d. random variables $\{\xi(n,x) : (n,x) \in \mathbb{N} \times \mathbb{Z}\}$ such that $P(\xi(n,x) = 1) = P(\xi(n,x) = -1) = \frac{1}{2}$.

To consider the general model, it is almost enough to replace $\frac{\beta\xi(n,x)}{N^{\frac{1}{4}}}$ by $m^{(N,1)}_{n,x} - 1$. We sometimes need to consider $\{\{q^{(N)}_{n,x}(k)\}_{k\geq 0} : (n,x) \in \mathbb{N} \times \mathbb{Z}\}$. Especially, γ appears in the same situation as the construction of the usual super-Brownian motion, so the reader will not have any difficulties extending the proof to the more general case.

Before starting the proof, we will look at the $X^{(N)}_t(\phi)$. Since $X^{(N)}_t$ are constant in $t \in [\underline{t}, \underline{t} + \frac{1}{N})$, it is enough to see the difference between $X^{(N)}_{\underline{t}}$ and $X^{(N)}_{\underline{t}+\frac{1}{N}}$;

$$X^{(N)}_{\underline{t}+\frac{1}{N}}(\phi) - X^{(N)}_{\underline{t}}(\phi) = \frac{1}{N}\sum_{\mathbb{x}\sim\underline{t}}\left(\phi\left(\frac{Y^{\mathbb{x}}_{\underline{t}N+1}}{N^{\frac{1}{2}}}\right)V^{\mathbb{x}} - \phi\left(\frac{Y^{\mathbb{x}}_{\underline{t}N}}{N^{\frac{1}{2}}}\right)\right),$$

where $\mathbb{x} \sim \underline{t}$ means that the particle $\mathbb{x}$ is the $\underline{t}N$-th generation, $Y^{\mathbb{x}}_{\underline{t}N}$ is the position of the particle $\mathbb{x}$ at time $\underline{t}N$ for $\mathbb{x} \sim \underline{t}$, $V^{\mathbb{x}}$ is the number of children of $\mathbb{x}$ and for simplicity, we omit N. We define $Y^{\mathbb{x}}_{\underline{t}N+1} = Y^{\mathbb{y}}_{\underline{t}N+1}$ for $\mathbb{y}$ which is a child of $\mathbb{x}$.

Also, we divide this summation into four parts:

$$\begin{aligned}
&(LHS)\\
&= \frac{1}{N}\sum_{\mathbb{x}\sim\underline{t}}\phi\left(\frac{Y^{\mathbb{x}}_{\underline{t}N+1}}{N^{\frac{1}{2}}}\right)\left(V^{\mathbb{x}} - 1 - \frac{\beta\xi(\underline{t}N, Y^{\mathbb{x}}_{\underline{t}N})}{N^{\frac{1}{4}}}\right)\\
&\quad + \frac{1}{N}\sum_{\mathbb{x}\sim\underline{t}}\phi\left(\frac{Y^{\mathbb{x}}_{\underline{t}N+1}}{N^{\frac{1}{2}}}\right)\frac{\beta\xi\left(\underline{t}N, Y^{\mathbb{x}}_{\underline{t}N}\right)}{N^{\frac{1}{4}}}\\
&\quad + \frac{1}{N}\sum_{\mathbb{x}\sim\underline{t}}\left(\phi\left(\frac{Y^{\mathbb{x}}_{\underline{t}N+1}}{N^{\frac{1}{2}}}\right) - \phi\left(\frac{Y^{\mathbb{x}}_{\underline{t}N}}{N^{\frac{1}{2}}}\right) - \frac{\phi\left(\frac{Y^{\mathbb{x}}_{\underline{t}N}+1}{N^{\frac{1}{2}}}\right) + \phi\left(\frac{Y^{\mathbb{x}}_{\underline{t}N}-1}{N^{\frac{1}{2}}}\right) - 2\phi\left(\frac{Y^{\mathbb{x}}_{\underline{t}N}}{N^{\frac{1}{2}}}\right)}{2}\right)\\
&\quad + \frac{1}{N}\sum_{\mathbb{x}\sim\underline{t}}\frac{\phi\left(\frac{Y^{\mathbb{x}}_{\underline{t}N}+1}{N^{\frac{1}{2}}}\right) + \phi\left(\frac{Y^{\mathbb{x}}_{\underline{t}N}-1}{N^{\frac{1}{2}}}\right) - 2\phi\left(\frac{Y^{\mathbb{x}}_{\underline{t}N}}{N^{\frac{1}{2}}}\right)}{2}
\end{aligned}$$

$$= \Delta M_{\underline{t}}^{(b,N)}(\phi) + \Delta M_{\underline{t}}^{(e,N)}(\phi) + \Delta M_{\underline{t}}^{(s,N)}(\phi) + \frac{1}{N}\sum_{\mathbb{x}\sim\underline{t}} \frac{\phi\left(\frac{Y_{\underline{t}N}^{\mathbb{x}}+1}{N^{\frac{1}{2}}}\right) + \phi\left(\frac{Y_{\underline{t}N}^{\mathbb{x}}-1}{N^{\frac{1}{2}}}\right) - 2\phi\left(\frac{Y_{\underline{t}N}^{\mathbb{x}}}{N^{\frac{1}{2}}}\right)}{2}.$$

Thus, we have that

$$X_t^{(N)}(\phi) - X_0^{(N)}(\phi) = \left(M_t^{(b,N)}(\phi) + M_t^{(e,N)}(\phi) + M_t^{(s,N)}(\phi)\right) + \int_0^{\underline{t}} X_s^{(N)}\left(A^N\phi\right) ds, \tag{3.1}$$

where

$$M_t^{(b,N)}(\phi) = \frac{1}{N}\sum_{\underline{s}<t}\sum_{\mathbb{x}\sim\underline{s}} \phi\left(\frac{Y_{\underline{s}N+1}^{\mathbb{x}}}{N^{\frac{1}{2}}}\right)\left(V^{\mathbb{x}} - 1 - \frac{\beta\xi(\underline{s}N, Y_{\underline{s}N}^{\mathbb{x}})}{N^{\frac{1}{4}}}\right),$$

$$M_t^{(e,N)}(\phi) = \frac{1}{N}\sum_{\underline{s}<t}\sum_{\mathbb{x}\sim\underline{s}} \phi\left(\frac{Y_{\underline{s}N+1}^{\mathbb{x}}}{N^{\frac{1}{2}}}\right)\frac{\beta\xi\left(\underline{s}N, Y_{\underline{s}N}^{\mathbb{x}}\right)}{N^{\frac{1}{4}}},$$

$$M_t^{(s,N)}(\phi) = \frac{1}{N}\sum_{\underline{s}<t}\sum_{\mathbb{x}\sim\underline{s}} \left(\phi\left(\frac{Y_{\underline{s}N+1}^{\mathbb{x}}}{N^{\frac{1}{2}}}\right) - \phi\left(\frac{Y_{\underline{s}N}^{\mathbb{x}}}{N^{\frac{1}{2}}}\right) - \frac{\phi\left(\frac{Y_{\underline{s}N}^{\mathbb{x}}+1}{N^{\frac{1}{2}}}\right) + \phi\left(\frac{Y_{\underline{s}N}^{\mathbb{x}}-1}{N^{\frac{1}{2}}}\right) - 2\phi\left(\frac{Y_{\underline{s}N}^{\mathbb{x}}}{N^{\frac{1}{2}}}\right)}{2}\right),$$

and $A^N : \mathcal{B}_b(\mathbb{R}) \to \mathcal{B}_b(\mathbb{R})$ is the following operator;

$$A^N\phi(x) = \frac{\phi\left(x + \frac{1}{N^{\frac{1}{2}}}\right) + \phi\left(x - \frac{1}{N^{\frac{1}{2}}}\right) - 2\phi(x)}{\frac{2}{N}}.$$

Actually, we have that

$$\int_0^{\underline{t}} X_s^{(N)}\left(A^N\phi\right) ds = \sum_{\underline{s}<t}\sum_{\mathbb{x}\sim\underline{s}} \frac{1}{N} A^N\phi\left(\frac{Y_{\underline{s}N}^{\mathbb{x}}}{N^{\frac{1}{2}}}\right).$$

Also, we remark that $M_{\underline{t}}^{(b,N)}(\phi)$, $M_{\underline{t}}^{(e,N)}(\phi)$, and $M_{\underline{t}}^{(s,N)}(\phi)$ are $\mathcal{F}_{\underline{t}N}^{(N)}$-martingales, where $\mathcal{F}_n^{(N)}$ is the σ-algebra

$$\sigma\left(V^{\mathbb{x}}, Y_{k+1}^{\mathbb{x}}, \xi(k,x) : |\mathbb{x}| \le n-1, k \le n-1, x \in \mathbb{Z}\right),$$

where $\mathcal{F}_0^{(N)} = \{\emptyset, \Omega\}$. Indeed, since $Y_{n+1}^{\mathbb{x}}$ are independent of $V^{\mathbb{x}}$ and $\xi(n,x)$,

$$E\left[M_{\underline{t}}^{(b,N)}(\phi) - M_{\underline{t}-\frac{1}{N}}^{(b,N)}(\phi)\middle|\mathcal{F}_{\underline{t}N-1}^{(N)}\right]$$
$$= \frac{1}{N}\sum_{\mathbb{x}\sim\underline{t}-\frac{1}{N}} E\left[\phi\left(\frac{Y_{\underline{t}N}^{\mathbb{x}}}{N^{\frac{1}{2}}}\right)\middle|\mathcal{F}_{\underline{t}N-1}^{(N)}\right] E\left[V^{\mathbb{x}} - 1 - \frac{\beta\xi\left(\underline{t}N-1, Y_{\underline{t}N-1}^{\mathbb{x}}\right)}{N^{\frac{1}{4}}}\middle|\mathcal{F}_{\underline{t}N-1}^{(N)}\right]$$
$$= 0,$$
$$E\left[M_{\underline{t}}^{(e,N)}(\phi) - M_{\underline{t}-\frac{1}{N}}^{(e,N)}(\phi)\middle|\mathcal{F}_{\underline{t}N-1}^{(N)}\right]$$
$$= \frac{1}{N}\sum_{\mathbb{x}\sim\underline{t}-\frac{1}{N}} E\left[\phi\left(\frac{Y_{\underline{t}N}^{\mathbb{x}}}{N^{\frac{1}{2}}}\right)\middle|\mathcal{F}_{\underline{t}N-1}^{(N)}\right] E\left[\frac{\beta\xi\left(\underline{t}N-1, Y_{\underline{t}N-1}^{\mathbb{x}}\right)}{N^{\frac{1}{4}}}\middle|\mathcal{F}_{\underline{t}N-1}^{(N)}\right]$$

$$= 0,$$

and

$$E\left[M_{\underline{t}}^{(s,N)}(\phi) - M_{\underline{t}-\frac{1}{N}}^{(s,N)}(\phi)\middle|\mathcal{F}_{\underline{t}N-1}^{(N)}\right] = 0,$$

almost surely.

Moreover, the decomposition (3.1) is very useful since the martingales $M_{\underline{t}}^{(i,N)}(\phi)$ $(i = b, e, s)$ are orthogonal to each others. Indeed, we have that

$$\begin{aligned}
&E\left[\left(\Delta M_{\underline{t}}^{(b,N)}(\phi)\right)\left(\Delta M_{\underline{t}}^{(e,N)}(\phi)\right)\middle|\mathcal{F}_{\underline{t}N-1}^{(N)}\right] \\
&= \frac{1}{N^2}\sum_{\mathbb{x},\mathbb{x}'\sim\underline{t}-\frac{1}{N}}\left(E\left[\phi\left(\frac{Y_{\underline{t}N}^{\mathbb{x}}}{N^{\frac{1}{2}}}\right)\phi\left(\frac{Y_{\underline{t}N}^{\mathbb{x}'}}{N^{\frac{1}{2}}}\right)\middle|\mathcal{F}_{\underline{t}N-1}^{(N)}\right]\right. \\
&\times E\left[E\left[\left(V^{\mathbb{x}}-1-\frac{\beta\xi(\underline{t}N-1, Y_{\underline{t}N-1}^{\mathbb{x}})}{N^{\frac{1}{4}}}\right)\middle|\mathcal{G}_{\underline{t}N-1}^{(N)}\right]\frac{\beta\xi(\underline{t}N-1, Y_{\underline{t}N-1}^{\mathbb{x}'})}{N^{\frac{1}{4}}}\middle|\mathcal{F}_{\underline{t}N-1}^{(N)}\right]\Bigg) \\
&= 0,
\end{aligned}$$

where $\mathcal{G}_n^{(N)} = \mathcal{F}_n^{(N)} \vee \sigma(\xi(n,x) : x \in \mathbb{Z})$ almost surely. Also, we can obtain by similar arguments that $E\left[\left(\Delta M_{\underline{t}}^{(b,N)}(\phi)\right)\left(\Delta M_{\underline{t}}^{(s,N)}(\phi)\right)\middle|\mathcal{F}_{\underline{t}N-1}^{(N)}\right] = E\left[\left(\Delta M_{\underline{t}}^{(s,N)}(\phi)\right)\left(\Delta M_{\underline{t}}^{(e,N)}(\phi)\right)\middle|\mathcal{F}_{\underline{t}N-1}^{(N)}\right] = 0$ almost surely.

3.1 Tightness

In this subsection, we will prove the following lemma.

Lemma 3.1. *The sequence $\{X^{(N)}\}$ is tight in $D([0,\infty), \mathcal{M}_F(\mathbb{R}))$, and each limit process is continuous.*

To prove it, we will use the following theorem which reduces the problem to the tightness of real-valued process [25, Theorem II. 4. 1].

Theorem 3.2. *Assume that E is a Polish space. Let D_0 be a separating class of $C_b(E)$ containing 1. A sequence of càdlàg $\mathcal{M}_F(E)$-valued processes $\left\{X^{(N)} : N \in \mathbb{N}\right\}$ is C-relatively compact in $D\left([0,\infty), \mathcal{M}_F(E)\right)$ if and only if*

(i) for every $\varepsilon, T > 0$, there is a compact set $K_{T,\varepsilon}$ in E such that

$$\sup_N P\left(\sup_{t\le T} X_t^{(N)}\left(K_{T,\varepsilon}^c\right) > \varepsilon\right) < \varepsilon,$$

(ii) and for all $\phi \in D_0$, $\left\{X^{(N)}(\phi) : N \in \mathbb{N}\right\}$ is C-relatively compact in $D\left([0,\infty), \mathbb{R}\right)$.

Assumption: We choose $C_b^2(\mathbb{R})$ as D_0, where $C_b^2(\mathbb{R})$ is the set of bounded continuous function on $\mathbb{R}$ with bounded derivatives of order 1 and 2.

Hereafter, we will check the conditions (i) and (ii) of Theorem 3.2 for our case. In the beginning, we give the proof of (ii) by using the following lemmas:

Lemma 3.3. *For $\phi \in C_b^2(\mathbb{R})$, $\sup_{t \le K} \left| M_t^{(s,N)}(\phi) \right| \xrightarrow{L^2} 0$ as $N \to \infty$ for all $K > 0$.*

Lemma 3.4. *(See [25, Lemma II 4.5].) Let $\left(M_{\underline{t}}^{(N)}, \overline{\mathcal{F}}_{\underline{t}}^N \right)$ be discrete time martingales with $M_0^{(N)} = 0$.*
Let $\langle M^{(N)} \rangle_{\underline{t}} = \sum_{0 \le \underline{s} < \underline{t}} E\left[\left(M_{\underline{s}+1/N}^{(N)} - M_{\underline{s}}^{(N)} \right)^2 \middle| \overline{\mathcal{F}}_{\underline{s}}^N \right]$, and we extend $M_\cdot^{(N)}$ and $\langle M^{(N)} \rangle_\cdot$ to $[0, \infty)$ as right continuous step functions.

(i) If $\left\{ \langle M^{(N)} \rangle_\cdot : N \in \mathbb{N} \right\}$ is C-relatively compact in $D([0,\infty), \mathbb{R})$ and

$$\sup_{0 \le \underline{t} \le K} \left| M_{\underline{t}+1/N}^{(N)} - M_{\underline{t}}^{(N)} \right| \xrightarrow{P} 0 \quad \text{as } N \to \infty \qquad \text{for all } K > 0, \tag{3.2}$$

then $M_\cdot^{(N)}$ is C-relatively compact in $D([0,\infty), \mathbb{R})$.

If, in addition,

$$\left\{ \left(M_{\underline{t}}^{(N)} \right)^2 + \langle M^{(N)} \rangle_{\underline{t}} : N \in \mathbb{N} \right\} \qquad \text{is uniformly integrable for all } \underline{t},$$

then $M_\cdot^{(N_k)} \overset{w}{\Rightarrow} M_\cdot$ in $D([0,\infty), \mathbb{R})$ implies that M is a continuous L^2-martingale and $\left(M_\cdot^{(N_k)}, \langle M^{(N_k)} \rangle_\cdot \right) \overset{w}{\Rightarrow} (M_\cdot, \langle M \rangle_\cdot)$ in $D([0,\infty), \mathbb{R})^2$.

Lemma 3.5. *For any $\phi \in C_b^2(\mathbb{R})$, the sequence $C_t^{(N)}(\phi) \equiv \int_0^{\underline{t}} X_s^{(N)} \left(A^N \phi \right) ds$ is C-relatively compact in $D([0,\infty), \mathbb{R})$.*

When we can verify the conditions of Lemma 3.4 for $M_\cdot^{(b,N)}(\phi)$, and $M_\cdot^{(e,N)}(\phi)$, the sequence $\left\{ X_\cdot^{(N)}(\phi) : N \in \mathbb{N} \right\}$ is C-relatively compact in $D([0,\infty), \mathbb{R})$. Moreover, if we check the condition of (i) in Theorem 3.2, then the tightness of $\left\{ X_\cdot^{(N)} : N \in \mathbb{N} \right\}$ follows immediately.

Before starting the proof of the above lemmas, we prepare the following lemma. It tells us the mean of the measure $X_{\underline{t}}^{(N)}$ is the same as the distribution of the scaled simple random walk.

Lemma 3.6. *We define historical process by*

$$H_t^{(N)} = \frac{1}{N} \sum_{\mathbb{x} \sim \underline{t}} \delta_{\frac{Y_{(\cdot \wedge t)N}^{\mathbb{x}}}{N^{1/2}}} \qquad \in \mathcal{M}_F \left(D([0,\infty), \mathbb{R}) \right),$$

where $Y_s^{\mathbb{x}} = Y_s^{\mathbb{y}}$ for $0 \le s < |\mathbb{x} \wedge \mathbb{y}| + 1$, that is $Y_s^{\mathbb{x}}$ is the position of the $\lfloor sN \rfloor$-generation's ancestor of $\mathbb{x}$.

If $\psi : D([0,\infty), \mathbb{R}) \to \mathbb{R}_{\ge 0}$ is Borel, then for any $t \ge 0$

$$E\left[H_t^{(N)}(\psi) \right] = E_Y \left[\psi \left(\frac{Y_{(\cdot \wedge t)N}}{N^{\frac{1}{2}}} \right) \right], \tag{3.3}$$

where $Y_\cdot$ is the trajectory of simple random walk on $\mathbb{Z}$. In particular, for all $\phi \in \mathcal{B}_+(\mathbb{R})$,

$$E\left[X_{\underline{t}}^{(N)}(\phi)\right] = E_Y\left[\phi\left(\frac{Y_{\underline{t}N}}{N^{\frac{1}{2}}}\right)\right]. \tag{3.4}$$

Moreover, for all x, $K > 0$, we have that

$$P\left(\sup_{t \le K} X_t^{(N)}(1) \ge x\right) \le x^{-1}. \tag{3.5}$$

To prove this lemma, we introduce some notation. For $x(\cdot), y(\cdot) \in D([0,\infty),\mathbb{R})$ such that $y(0) = 0$,

$$(x/s/y)(t) = \begin{cases} x(t) & \text{if } 0 \le t < s, \\ x(s) + y(t-s) & \text{if } t \ge s. \end{cases}$$

Then, $(x/s/y)(\cdot) \in D([0,\infty),\mathbb{R})$.

Proof. (3.3) follows from the Markov property. Indeed, we have

$$\begin{aligned} E\left[H_{\underline{t}}^{(N)}(\psi)\right] &= E\left[\frac{1}{N}\sum_{\mathrm{y}\sim\underline{t}} \psi\left(\frac{Y^{\mathrm{y}}_{(\cdot\wedge\underline{t})N}}{N^{\frac{1}{2}}}\right)\right] \\ &= E\left[\frac{1}{N}\sum_{\mathrm{x}\sim\underline{t}-\frac{1}{N}} \psi\left(\frac{Y^{\mathrm{x}}_{(\cdot\wedge\underline{t})N}}{N^{\frac{1}{2}}}\right) E\left[V^{\mathrm{x}} \,|\, \mathcal{F}^{(N)}_{\underline{t}N-1}\right]\right] \\ &= E\left[E_{Z_1}\left[\frac{1}{N}\sum_{\mathrm{x}\sim\underline{t}-\frac{1}{N}} \psi\left(\frac{\left(Y^{\mathrm{x}}_{(\cdot\wedge(\underline{t}-\frac{1}{N}))N}/\underline{t}N/Z_1\right)((\cdot\wedge\underline{t})N)}{N^{\frac{1}{2}}}\right)\right]\right], \end{aligned}$$

where $Z_1(\cdot)$ is a random function independent of $Y^{\mathrm{x}}_{\cdot N}$ such that $Z_1(s) = 0$ for $0 \le s < 1$, $P(Z_1(s) = 1 \text{ for } s \ge 1) = P(Z_1(s) = -1 \text{ for } \ge 1) = \frac{1}{2}$. Iterating this,

$$\begin{aligned} &E\left[H_{\underline{t}}^{(N)}(\psi)\right] \\ &= E\left[E_{Z_1,Z_2}\left[\frac{1}{N}\sum_{\mathrm{x}\sim\underline{t}-\frac{2}{N}} \psi\left(\frac{\left(\left(Y^{\mathrm{x}}_{(\cdot\wedge\underline{t}-\frac{2}{N})N}\big/\underline{t}N-2\big/Z_2\right)\big/\underline{t}N-1\big/Z_1\right)((\cdot\wedge\underline{t})N)}{N^{\frac{1}{2}}}\right)\right]\right] \\ &= E_Y\left[\psi\left(\frac{Y_{((\cdot\wedge\underline{t})N)}}{N^{\frac{1}{2}}}\right)\right], \end{aligned}$$

where Z_2 is independent copy of Z_1 and $Y(\cdot)$ is the trajectory of simple random walk. Also, (3.5) follows from the fact that $X_{\underline{t}}^{(N)}(1)$ is an $\mathcal{F}^{(N)}_{\underline{t}N}$-martingale, from the L^1 inequality for nonnegative submartingales, and from (3.4).

□

Proof of Lemma 3.5. We know $X_0^{(N)}(\phi) = \phi(0)$. Also, we have that for any $K > 0$

$$\begin{aligned}\left|C_t^{(N)}(\phi) - C_s^{(N)}(\phi)\right| &\leq \int_{\underline{s}}^{\underline{t}} \left|X_{\underline{u}}^{(N)}\left(A^N\phi\right)\right| du \\ &\leq \sup_{\underline{u}\leq K} C(\phi) X_{\underline{u}}^{(N)}(1)|\underline{t}-\underline{s}|, \end{aligned} \tag{3.6}$$

where we have used that the boundedness of $A^N\phi$. We can use the Arzela-Ascoli Theorem by (3.5) and (3.6) so that $\left\{C_\cdot^{(N)}(\phi) : N \in \mathbb{N}\right\}$ are C-relatively compact sequences in $D\left([0,\infty),\mathbb{R}\right)$. (See Corollary 3.7.3, Remark 3.7.4, and Theorem 3.10.2 in [11].) □

Proof of Lemma 3.3. Let $h_N(y) = E^y\left[\left(\phi\left(\frac{Y_1}{N^{\frac{1}{2}}}\right) - \phi\left(\frac{Y_0}{N^{\frac{1}{2}}}\right)\right)^2\right]$. First, we remark that

$$\phi\left(\frac{Y^{\mathbb{x}}_{\underline{s}N+1}}{N^{\frac{1}{2}}}\right) - \phi\left(\frac{Y^{\mathbb{x}}_{\underline{s}N}}{N^{\frac{1}{2}}}\right) - \frac{1}{N}A^N\phi\left(\frac{Y^{\mathbb{x}}_{\underline{s}N}}{N^{\frac{1}{2}}}\right)$$

are orthogonal for $\mathbb{x} \neq \mathbb{x}' \sim \underline{s}$. Since $M_t^{(s,N)}(\phi)$ is a martingale, we have that

$$\begin{aligned}
&E\left[\left(M_K^{(s,N)}(\phi)\right)^2\right] \\
&= \sum_{\underline{s}<K} E\left[\left(\Delta M_{\underline{s}}^{(s,N)}(\phi)\right)^2\right] \\
&= \frac{1}{N^2}\sum_{\underline{s}<K} E\left[\sum_{\mathbb{x}\sim\underline{s}} E\left[\left(\phi\left(\frac{Y^{\mathbb{x}}_{\underline{s}N+1}}{N^{\frac{1}{2}}}\right) - \phi\left(\frac{Y^{\mathbb{x}}_{\underline{s}N}}{N^{\frac{1}{2}}}\right) - \frac{1}{N}A^N\phi\left(\frac{Y^{\mathbb{x}}_{\underline{s}N}}{N^{\frac{1}{2}}}\right)\right)^2 \middle| \mathcal{F}_{\underline{s}N}^{(N)}\right]\right] \\
&\leq \frac{2}{N}\sum_{\underline{s}<K} E\left[\frac{1}{N}\sum_{\mathbb{x}\sim\underline{s}}\left(h_N\left(Y^{\mathbb{x}}_{\underline{s}N}\right) + \frac{1}{N^2}\|A^N\phi\|^2\right)\right] \\
&\leq 2E\left[\int_0^K \left(X_s^{(N)}(h_N) + \|A^N\phi\|_\infty^2 N^{-2} X_s^{(N)}(1)\right) ds\right] \\
&\leq 2\left(E_Y\left[\int_0^K \left(\phi\left(\frac{Y_{\underline{s}N+1}}{N^{\frac{1}{2}}}\right) - \phi\left(\frac{Y_{\underline{s}N}}{N^{\frac{1}{2}}}\right)\right)^2 ds\right] + \frac{K}{N^2}\sup_N \|A^N\phi\|_\infty^2 X_0^{(N)}(1)\right) \\
&\to 0,
\end{aligned}$$

where we have used Lemma 3.6 and the fact that $\sup_N \|A^N\phi\|_\infty < \infty$ for $\phi \in C_b^2(\mathbb{R})$ and $\{X_{\underline{t}}^{(N)}(1) : 0 \leq \underline{t} \leq \underline{K}\}$ is a martingale with respect to $\mathcal{F}_{\underline{t}N}^{(N)}$ in the last line. □

Next, we will check the conditions in Lemma 3.4 for $M_\cdot^{(b,N)}(\phi)$ and $M_\cdot^{(e,N)}(\phi)$, that is,

(1) $\left\{\left\langle M^{(b,N)}(\phi)\right\rangle_\cdot + \left\langle M^{(e,N)}(\phi)\right\rangle_\cdot : N \in \mathbb{N}\right\}$ is C-relatively compact in $D([0,\infty),\mathbb{R})$.

(2) $\sup_{0\le \underline{t}\le K}\left|M^{(b,N)}_{\underline{t}+\frac{1}{N}}(\phi)-M^{(b,N)}_{\underline{t}}(\phi)+M^{(e,N)}_{\underline{t}+\frac{1}{N}}(\phi)-M^{(e,N)}_{\underline{t}}(\phi)\right|\xrightarrow{P}0$ as $N\to\infty$ for all $K>0$.

(3) $\left\{\left(M^{(b,N)}_{\underline{t}}(\phi)\right)^2+\left(M^{(e,N)}_{\underline{t}}(\phi)\right)^2+\left\langle M^{(b,N)}(\phi)\right\rangle_{\underline{t}}+\left\langle M^{(e,N)}(\phi)\right\rangle_{\underline{t}}:N\in\mathbb{N}\right\}$ is uniformly integrable for all $\underline{t}$.

As we verified that $M^{(b,N)}(\phi)$ and $M^{(e,N)}(\phi)$ are orthogonal, we have that

$$\left\langle M^{(b,N)}(\phi)+M^{(e,N)}(\phi)\right\rangle_{\cdot}=\left\langle M^{(b,N)}(\phi)\right\rangle_{\cdot}+\left\langle M^{(e,N)}(\phi)\right\rangle_{\cdot}.$$

Moreover, since under fixed environment $\{\xi(n,x):(n,x)\in\mathbb{N}\times\mathbb{Z}\}$, $V^{\mathbb{x}}$ and $V^{\mathbb{y}}$ are independent for $\mathbb{x}\neq\mathbb{y}$, we have that

$$\begin{aligned}
&\left\langle M^{(b,N)}(\phi)\right\rangle_{\underline{t}}\\
&=\sum_{\underline{s}<t}E\left[\left(M^{(b,N)}_{\underline{s}+\frac{1}{N}}(\phi)-M^{(b,N)}_{\underline{s}}(\phi)\right)^2\middle|\mathcal{F}^{(N)}_{\underline{s}N}\right]\\
&=\frac{1}{N^2}\sum_{\underline{s}<t}\sum_{\mathbb{x}\sim\underline{s}}E\left[\phi\left(\frac{Y^{\mathbb{x}}_{\underline{s}N+1}}{N^{\frac{1}{2}}}\right)^2\middle|\mathcal{F}^{(N)}_{\underline{s}N}\right]E\left[\left(V^{\mathbb{x}}-1-\frac{\beta\xi\left(\underline{s}N,Y^{\mathbb{x}}_{\underline{s}N}\right)}{N^{\frac{1}{4}}}\right)^2\middle|\mathcal{F}^{(N)}_{\underline{s}N}\right]\\
&=\frac{1}{N^2}\sum_{\underline{s}<t}\sum_{\mathbb{x}\sim\underline{s}}E\left[\left(\left(\phi\left(\frac{Y^{\mathbb{x}}_{\underline{s}N+1}}{N^{\frac{1}{2}}}\right)-\phi\left(\frac{Y^{\mathbb{x}}_{\underline{s}N}}{N^{\frac{1}{2}}}\right)\right)+\phi\left(\frac{Y^{\mathbb{x}}_{\underline{s}N}}{N^{\frac{1}{2}}}\right)\right)^2\middle|\mathcal{F}^{(N)}_{\underline{s}N}\right]\left(1-\frac{\beta^2}{N^{\frac{1}{2}}}\right)\\
&=\frac{1}{N}\sum_{\underline{s}<t}X^{(N)}_{\underline{s}}\left(\phi^2\right)\left(1-\frac{\beta^2}{N^{\frac{1}{2}}}\right)+\frac{1}{N^{\frac{1}{2}}}\frac{\mathcal{O}(1)}{N}\sum_{\underline{s}<t}X^{(N)}_{\underline{s}}(1)\left(1-\frac{\beta^2}{N^{\frac{1}{2}}}\right)\\
&=\int_0^t X^{(N)}_s\left(\phi^2+\frac{\mathcal{O}(1)}{N^{\frac{1}{2}}}\right)ds,
\end{aligned}$$

and

$$\begin{aligned}
&\left\langle M^{(e,N)}(\phi)\right\rangle_{\underline{t}}\\
&=\sum_{\underline{s}<t}E\left[\left(M^{(e,N)}_{\underline{s}+\frac{1}{N}}(\phi)-M^{(e,N)}_{\underline{s}}(\phi)\right)^2\middle|\mathcal{F}^{(N)}_{\underline{s}N}\right]\\
&=\frac{\beta^2}{N^2}\sum_{\underline{s}<t}\sum_{\mathbb{x},\tilde{\mathbb{x}}\sim\underline{t}}E\left[\phi\left(\frac{Y^{\mathbb{x}}_{\underline{s}N+1}}{N^{\frac{1}{2}}}\right)\phi\left(\frac{Y^{\tilde{\mathbb{x}}}_{\underline{s}N+1}}{N^{\frac{1}{2}}}\right)\middle|\mathcal{F}^{(N)}_{\underline{s}N}\right]\frac{\mathbf{1}\left\{Y^{\mathbb{x}}_{\underline{s}N}=Y^{\tilde{\mathbb{x}}}_{\underline{s}N}\right\}}{N^{\frac{1}{2}}}\\
&=\frac{\beta^2}{N^2}\sum_{\underline{s}<t}\sum_{\mathbb{x},\tilde{\mathbb{x}}\sim\underline{t}}\left(\phi\left(\frac{Y^{\mathbb{x}}_{\underline{s}N}}{N^{\frac{1}{2}}}\right)^2+\frac{\mathcal{O}(1)}{N^{\frac{1}{2}}}\right)\frac{\mathbf{1}\left\{Y^{\mathbb{x}}_{\underline{s}N}=Y^{\tilde{\mathbb{x}}}_{\underline{s}N}\right\}}{N^{\frac{1}{2}}}\\
&=\frac{1}{N}\beta^2\sum_{\underline{s}<t}\sum_{x\in\mathbb{Z}}\left(\phi\left(\frac{x}{N^{\frac{1}{2}}}\right)^2+\frac{\mathcal{O}(1)}{N^{\frac{1}{2}}}\right)\frac{\left(B^{(N)}_{\underline{s}N,x}\right)^2}{N^{\frac{3}{2}}}\\
&=\beta^2\int_0^t\sum_{x\in\mathbb{Z}}\left(\phi\left(\frac{x}{N^{\frac{1}{2}}}\right)^2+\frac{\mathcal{O}(1)}{N^{\frac{1}{2}}}\right)\frac{\left(B^{(N)}_{\underline{s}N,x}\right)^2}{N^{\frac{3}{2}}}ds,
\end{aligned}$$

where $|\mathcal{O}(1)| \leq C_\phi$ for a constant C_ϕ that depends only on ϕ.

Therefore, we have that

$$\begin{aligned}
&\left\langle M^{(b,N)}(\phi)\right\rangle_{\underline{t}} + \left\langle M^{(e,N)}(\phi)\right\rangle_{\underline{t}} - \left\langle M^{(b,N)}(\phi)\right\rangle_{\underline{s}} - \left\langle M^{(e,N)}(\phi)\right\rangle_{\underline{s}} \\
&\leq C_\phi \left(\left\langle M^{(b,N)}(1)\right\rangle_{\underline{t}} + \left\langle M^{(e,N)}(1)\right\rangle_{\underline{t}} - \left\langle M^{(b,N)}(1)\right\rangle_{\underline{s}} - \left\langle M^{(e,N)}(1)\right\rangle_{\underline{s}} \right) \\
&= C \left(\left\langle X^{(N)}(1)\right\rangle_{\underline{t}} - \left\langle X^{(N)}(1)\right\rangle_{\underline{s}} \right), \qquad (3.7)
\end{aligned}$$

where we remark that $\left\{X^{(N)}_{\underline{t}}(1) : 0 \leq \underline{t}\right\}$ is a martingale with respect to $\mathcal{F}^{(N)}_{\underline{t}N}$ and $M^{(s,N)}_t(1) = 0$ for any $0 \leq t < \infty$.

We will prove C-relative compactness of (3.7) by showing the following lemma.

Lemma 3.7. *For any $K > 0$*

$$\sup_N E\left[\left(X^{(N)}_{\underline{K}}(1)\right)^2\right] < \infty,$$

and for any $\varepsilon > 0$,

$$\lim_{\delta\to 0}\sup_{N\geq 1} P\left(\sup_{0\leq s\leq K}\left(\left\langle X^{(N)}(1)\right\rangle_{\underline{s}+\delta} - \left\langle X^{(N)}(1)\right\rangle_{\underline{s}}\right) > \varepsilon\right) = 0.$$

Proof. We remark that for each N, $B^{(N)}_n$ is a martingale with respect to the filtration $\mathcal{F}^{(N)}_n$.

Let $B^{(i,N)}_n$ be the total number of particles at time n which are the descendants from i-th initial particle. Then, we remark that for $i \neq j$

$$\begin{aligned}
E\left[B^{(i,N)}_{\lfloor KN\rfloor} B^{(j,N)}_{\lfloor KN\rfloor}\right] &= E\left[E\left[B^{(i,N)}_{\lfloor KN\rfloor}\middle|\mathcal{H}\right] E\left[B^{(j,N)}_{\lfloor KN\rfloor}\middle|\mathcal{H}\right]\right] \\
&= E_{Y^1Y^2}\left[\left(1+\frac{\beta^2}{N^{\frac{1}{2}}}\right)^{\sharp\left\{i\leq\lfloor KN\rfloor : Y^1_i = Y^2_i\right\}}\right],
\end{aligned}$$

where $\mathcal{H}$ is the σ-algebra generated by $\{\xi(n,x) : (n,x) \in \mathbb{N}\times\mathbb{Z}\}$, and Y^1 and Y^2 are independent simple random walks on $\mathbb{Z}$ starting from the origin.

On the other hand,

$$\begin{aligned}
E\left[\left(B^{(i,N)}_{\lfloor KN\rfloor}\right)^2\right] &= 1 + \sum_{k=1}^{\lfloor KN\rfloor - 1} cE_{Y^1Y^2}\left[\left(1+\frac{\beta^2}{N^{\frac{1}{2}}}\right)^{\sharp\left\{k<i\leq\lfloor KN\rfloor : Y^1_i = Y^2_i\right\}} : Y^1_k = Y^2_k\right] + c \\
&\leq \lfloor KN\rfloor E_{Y^1Y^2}\left[\left(1+\frac{\beta^2}{N^{\frac{1}{2}}}\right)^{\sharp\left\{i\leq\lfloor KN\rfloor : Y^1_i = Y^2_i\right\}}\right],
\end{aligned}$$

where $c = 1 - \frac{1}{N^{\frac{1}{2}}} < 1$ [31, Lemma 2.3]. Thus, we have that

$$E\left[\left(X^{(N)}_{\underline{K}}(1)\right)^2\right] \leq \frac{1}{N^2}\left(N(N-1) + N\lfloor KN\rfloor\right) E_{Y^1Y^2}\left[\left(1+\frac{\beta^2}{N^{\frac{1}{2}}}\right)^{\sharp\left\{i\leq\lfloor KN\rfloor : Y^1_i = Y^2_i\right\}}\right]$$

$$\leq C(K)E_{Y^1Y^2}\left[\left(1+\frac{\beta^2}{N^{\frac{1}{2}}}\right)^{\sharp\left\{i\leq\lfloor KN\rfloor:Y_i^1=Y_i^2\right\}}\right].$$

Since $E_{Y^1Y^2}\left[\left(1+\frac{\beta^2}{N^{\frac{1}{2}}}\right)^{\sharp\left\{i\leq\lfloor KN\rfloor:Y_i^1=Y_i^2\right\}}\right]$ is bounded (Lemma 4.1), we complete the proof of the first statement.

Now, we turn to the proof of the latter part of the statement. Let $\delta>0$. It follows from the above argument that

$$\begin{aligned}&\left\langle X^{(N)}(1)\right\rangle_t-\left\langle X^{(N)}(1)\right\rangle_s\\&=\int_s^t\left(X_u^{(N)}(1)+\beta^2\sum_{x\in\mathbb{Z}}\frac{\left(B^{(N)}_{\lfloor uN\rfloor,x}\right)^2}{N^{\frac{3}{2}}}\right)du.\end{aligned}$$

We know that $\left|\int_s^t X_u^{(N)}(1)du\right|\leq\left(\sup_{u\leq K}X_u^{(N)}(1)\right)|t-s|$ and Lemma 3.6 implies that this term converges in probability to 0 as $|t-s|\to 0$ uniformly in $0\leq s\leq t\leq K$. So, it is enough to show that for any $\varepsilon>0$

$$\lim_{\delta\to 0}\sup_{N\geq 1}P\left(\sup_{0\leq s\leq K}\int_s^{s+\delta}\sum_{x\in\mathbb{Z}}\frac{\left(B^{(N)}_{\lfloor uN\rfloor,x}\right)^2}{N^{\frac{3}{2}}}du>\varepsilon\right)=0.$$

We consider the segments $I_k^\delta=[2k\delta,2(k+1)\delta]$ for $0\leq k\leq\left\lfloor\frac{K}{2\delta}\right\rfloor$. Then, we have that

$$\begin{aligned}&E\left[\left(\int_{I_\delta^k}\sum_{x\in\mathbb{Z}}\frac{\left(B^{(N)}_{\lfloor uN\rfloor,x}\right)^2}{N^{\frac{3}{2}}}du\right)^2\right]\\&=\frac{1}{N^5}E\left[\sum_{s=2k\delta N}^{2(k+1)\delta N}\sum_{t=2k\delta N}^{2(k+1\delta N)}\sum_{x,y\in\mathbb{Z}}\left(B^{(N)}_{\lfloor sN\rfloor,x}\right)^2\left(B^{(N)}_{\lfloor tN\rfloor,y}\right)^2\right]\\&\leq\frac{1}{N^5}\left(\sum_{s=2k\delta N}^{2(k+1)\delta N}\sum_{x\in\mathbb{Z}}E\left[\left(B^{(N)}_{\lfloor sN\rfloor,x}\right)^4\right]^{\frac{1}{2}}\right)^2.\end{aligned}\tag{3.8}$$

Corollary 4.3 implies that

$$\begin{aligned}&E\left[\left(B^{(N)}_{\lfloor sN\rfloor,x}\right)^4\right]\\&\leq(s\vee 1)^4N^4E_{Y^1Y^2Y^3Y^4}\left[\left(1+\frac{7\beta^2}{N^{\frac{1}{2}}}\right)^{\sharp\{1\leq i\leq sN:Y_i^a=Y_i^b,a,b\in\{1,2,3,4\}\}}:\begin{smallmatrix}Y^a_{\lfloor sN\rfloor}=x,\\a\in\{1,2,3,4\}\end{smallmatrix}\right],\end{aligned}\tag{3.9}$$

where we have used that for N large enough, $E\left[\left(1+\frac{\beta\xi(0,0)}{N^{\frac{1}{4}}}\right)^4\right]\leq 1+\frac{7\beta^2}{N^{\frac{1}{2}}}$.

Hölder's inequality and Lemma 4.1 imply that

$$
\begin{aligned}
(3.9) &\le (s\vee 1)^4 N^4 E_{Y^1Y^2}\left[\left(1+\frac{7\beta^2}{N^{\frac{1}{2}}}\right)^{6\sharp\{1\le i\le sN: Y_i^1=Y_i^2\}} : Y^1_{\lfloor sN\rfloor}=Y^2_{\lfloor sN\rfloor}=x\right] \\
&\qquad\qquad \times P_{Y^1}\left(Y^1_{\lfloor sN\rfloor}=x\right)^2 \\
&\le C\frac{(s\vee 1)^4N^4}{(sN\vee 1)^{\frac{1}{2}}}P_{Y^1}\left(Y^1_{\lfloor sN\rfloor}=x\right)^3.
\end{aligned}
$$

Thus, the local limit theorem implies that

$$
\begin{aligned}
(3.8) &\le \frac{C}{N}\left(\sum_{s=2k\delta N}^{2(k+1)\delta N}\sum_{x\in\mathbb{Z}}\frac{(K\vee 1)^2}{(sN\vee 1)^{\frac{1}{4}}}\frac{1}{(sN\vee 1)^{\frac{1}{4}}}P_{Y^1}\left(Y^1_{\lfloor sN\rfloor}=x\right)\right)^2 \\
&\le \frac{CK^4}{N}\left(\sqrt{2(k+1)\delta N}-\sqrt{2k\delta N}\right)^2.
\end{aligned}
$$

Thus, we obtained that

$$
P\left(\int_{I_k^\delta}\sum_{x\in\mathbb{Z}}\frac{\left(B^{(N)}_{\lfloor uN\rfloor,x}\right)^2}{N^{\frac{3}{2}}}du>\varepsilon\right)\le\frac{CK^4\delta}{\varepsilon^2(\sqrt{2(k+1)}+\sqrt{2k})^2}.
$$

Since for each $0\le s\le K$, there is some k such that $[s,s+\delta]\subset I_k^\delta\cup I_{k+1}^\delta$, we have that

$$
\begin{aligned}
\sup_{N\ge 1}P\left(\sup_{0\le s\le K}\int_s^{s+\delta}\sum_{x\in\mathbb{Z}}\frac{\left(B^{(N)}_{\lfloor uN\rfloor,x}\right)^2}{N^{\frac{3}{2}}}du>\varepsilon\right) &\le 2\sum_{k=0}^{\frac{K}{\delta}}\frac{CK^4\delta}{\varepsilon^2(\sqrt{2(k+1)}+\sqrt{2k})^2} \\
&\le 2\frac{CK^4\delta\log\frac{K}{\delta}}{\varepsilon^2}\to 0 \text{ as } \delta\to 0.
\end{aligned}
$$

□

Also, we prove the following lemmas to check the conditions (1)-(3).

Lemma 3.8. *For $\phi\in C_b^2(\mathbb{R})$,*

$$
\lim_{N\to\infty}E\left[\sum_{\underline{t}\le K}\left|\Delta M^{(b,N)}_{\underline{t}}(\phi)+\Delta M^{(e,N)}_{\underline{t}}(\phi)\right|^4\right]=0 \qquad \textit{for all } K>0.
$$

Lemma 3.9. *For $\phi\in C_b^2(\mathbb{R})$,*

$$
\sup_N E\left[\sup_{\underline{t}\le K}\left|M^{(b,N)}_{\underline{t}}(\phi)+M^{(e,N)}_{\underline{t}}(\phi)\right|^4\right]<\infty \qquad \textit{for all } K>0,
$$

and

$$
E\left[\left(\left\langle M^{(b,N)}(\phi)+M^{(e,N)}(\phi)\right\rangle_K\right)^2\right]<\infty \qquad \textit{for all } K>0.
$$

If we prove these lemmas, then we can verify the condition of Theorem 3.2 (ii).

Proof of the C-relatively compactness of $\{X_\cdot^{(N)}(\phi) : N \in \mathbb{N}\}$. When we look at the process $\left\{X_\cdot^{(N)}(\phi)\right\}$, it is divided into some processes, $X_0^{(N)}(\phi)$, $M_\cdot^{(b,N)}(\phi)$, $M_\cdot^{(e,N)}(\phi)$, $M_\cdot^{(b,N)}(\phi)$, and $C_\cdot^{(N)}(\phi)$.

We know that $M_\cdot^{(s,N)}(\phi)$ and $X_0^{(N)}(\phi)$ converges to constant by Assumptions and Lemma 3.3. C-relative compactness of $C_\cdot^{(N)}(\phi)$ has been proved in Lemma 3.5.

Arzela-Ascoli's theorem and Lemma 3.7 imply that $\left\{\left\langle M^{(b,N)}(\phi) + M^{(e,N)}(\phi)\right\rangle_\cdot : N \in \mathbb{N}\right\}$ is C-relatively compact in $D\left([0,\infty),\mathbb{R}\right)$. Also, (3.2) follows from Lemma 3.8 . The uniform integrability of $\left\{\left(M_{\underline{t}}^{(b,N)}(\phi) + M_{\underline{t}}^{(e,N)}(\phi)\right)^2 + \left\langle M^{(b,N)}(\phi) + M^{(e,N)}(\phi)\right\rangle_{\underline{t}}\right\}$ has been shown by Lemma 3.7 and Lemma 3.9. Thus, we have checked all conditions in Lemma 3.4 so that $\left\{M_\cdot^{(b,N)}(\phi) + M_\cdot^{(e,N)}(\phi), \left\langle M^{(b,N)}(\phi) + M^{(e,N)}(\phi)\right\rangle_\cdot\right\}$ is C-relatively compact in $D([0,\infty),\mathbb{R})$.

Thus, $\left\{X_\cdot^{(N)}(\phi)\right\}$ is C-relatively compact in $D([0,\infty),\mathbb{R})$ for each $\phi \in C_b^2(\mathbb{R})$.

□

To prove Lemma 3.8, we will use the following proposition (see [3]).

Proposition 3.10. *Let $\phi : \mathbb{R}_{\geq 0} \to \mathbb{R}_{\geq 0}$ is continuous, increasing, $\phi(0) = 0$ and $\phi(2\lambda) \leq c_0\phi(\lambda)$ for all $\lambda \geq 0$. $(M_n, \mathcal{F}_n)$ is a martingale, $M_n^* = \sup_{k\leq n} |M_k|$, $\langle M\rangle_n = \sum_{i=1}^{n} E\left[(M_k - M_{k-1})^2 \middle| \mathcal{F}_{k-1}\right] + E[M_0^2]$, and $d_n^* = \max_{1\leq k\leq n} |M_k - M_{k-1}|$. Then, there exists $c = c(c_0)$ such that*

$$E\left[\phi\left(M_n^*\right)\right] \leq cE\left[\phi\left(\langle M\rangle_n^{1/2}\right) + \phi\left(d_n^*\right)\right].$$

Proof of Lemma 3.8. It is enough to show that

$$\lim_{N\to\infty} E\left[\sum_{\underline{t}\leq K} \left|\Delta M_{\underline{t}}^{(b,N)}(\phi)\right|^4 + \left|\Delta M_{\underline{t}}^{(e,N)}(\phi)\right|^4\right] = 0 \qquad \text{for all } K > 0.$$

Conditional on $\mathcal{G}_{\underline{t}N}^{(N)}$, $\Delta M_{\underline{t}}^{(b,N)}(\phi)$ is a sum of mean 0 independent random variables; $W^{(b,\mathbb{x},N)} := \frac{1}{N}\phi\left(\frac{Y_{\underline{t}N+1}^{\mathbb{x}}}{N^{\frac{1}{2}}}\right)\left(V^{\mathbb{x}} - 1 - \frac{\beta\xi\left(\underline{t}N, Y_{\underline{t}N}^{\mathbb{x}}\right)}{N^{\frac{1}{4}}}\right)$. Applying Proposition 3.10 into $\sum_{\mathbb{x}\sim\underline{t}} W^{(b,\mathbb{x},N)}$, we have

$$E\left[\left(\sup_{i\leq B_{\underline{t}N}^{(N)}} \sum_{k=1}^{i} W^{(b,\mathbb{x}_k,N)}\right)^4 \middle| \mathcal{G}_{\underline{t}N}^{(N)}\right]$$

$$\leq c\left(\sum_{i\leq B^{(N)}_{\underline{t}N}}\left(\frac{C_1(\phi)\left(1-\mathcal{O}(N^{-1/2})\right)}{N^2}\right)^2+\left(\frac{C_2(\phi)}{N}\right)^4\right),$$

where $\mathbb{x}_k$ is the k-th particle at time $\underline{t}N$. Thus,

$$E\left[\sum_{\underline{t}\leq K}\left|\Delta M^{(b,N)}_{\underline{t}}(\phi)\right|^4\right]$$
$$\leq c\left(\frac{C_1(\phi)^2(1-\mathcal{O}(N^{-\frac{1}{2}}))}{N^4}\cdot(KN)\cdot E[NX^{(N)}_{\underline{t}}(1)]+KN\cdot\frac{C_2(\phi)^4}{N^4}\right)\to 0.$$

Next, we will prove that

$$\lim_{N\to\infty}E\left[\sum_{\underline{t}\leq K}\left|\Delta M^{(e,N)}_{\underline{t}}(\phi)\right|^4\right]=0\ \text{ for all } K>0.$$

It is clear that for $\phi\in C^2_b(\mathbb{R})$

$$E\left[\left|\Delta M^{(e,N)}_{\underline{t}}(\phi)\right|^4\right]\leq C(\phi)E\left[\sum_{x,y\in\mathbb{Z}}2\frac{\left(B^{(N)}_{\underline{t}N,x}\right)^2\left(B^{(N)}_{\underline{t}N,y}\right)^2}{N^5}\right].$$

Then, it follows from Corollary 4.3 and a similar argument in the proof of Lemma 3.7 that

$$\frac{E\left[\left(B^{(N)}_{\underline{t}N,x}\right)^2\left(B^{(N)}_{\underline{t}N,y}\right)^2\right]}{N^5}$$
$$\leq\frac{C(\underline{t}\vee 1)^4}{N}E_{Y^1Y^2Y^3Y^4}\left[\left(1+\frac{7\beta^2}{N^{\frac{1}{2}}}\right)^{\sharp\{1\leq i\leq\underline{t}N:Y^a_i=Y^b_i,a,b\in\{1,2,3,4\}\}}:\begin{smallmatrix}Y^1_{\underline{t}N}=Y^2_{\underline{t}N}=x\\ Y^3_{\underline{t}N}=Y^b_{\underline{t}N}=y\end{smallmatrix}\right]$$
$$\leq\frac{C(\underline{t}\vee 1)^4}{N}\prod_{\substack{a,b\in\{1,2,3,4\}\\ a\neq b}}E_{Y^1Y^2Y^3Y^4}\left[\left(1+\frac{7\beta^2}{N^{\frac{1}{2}}}\right)^{6\sharp\{1\leq i\leq\underline{t}N:Y^a_i=Y^b_i\}}:\begin{smallmatrix}Y^1_{\underline{t}N}=Y^2_{\underline{t}N}=x\\ Y^3_{\underline{t}N}=Y^b_{\underline{t}N}=y\end{smallmatrix}\right]^{\frac{1}{6}}$$
$$\leq\frac{C(\underline{t}\vee 1)^4}{N\sqrt{\underline{t}N}}P_{Y^1}\left(Y^1_{\underline{t}N}=x\right)P_{Y^1}\left(Y^1_{\underline{t}N}=y\right)\left(P_{Y^1}\left(Y^1_{\underline{t}N}=x\right)\wedge P_{Y^1}\left(Y^1_{\underline{t}N}=y\right)\right).$$

Thus, we have that

$$E\left[\left|\Delta M^{(e,N)}_{\underline{t}}(\phi)\right|^4\right]\leq C(\phi)(K\vee 1)^4\sum_{\underline{t}\leq K}\frac{1}{N\cdot\underline{t}N}\to 0,$$

as $N\to\infty$.

□

Proof of Lemma 3.9. We apply Proposition 3.10 into martingale $M^{(b,N)}_{\underline{t}}(\phi)+M^{(e,N)}_{\underline{t}}(\phi)$. Then, we have that

$$E\left[\sup_{\underline{t}\leq K}\left(M^{(b,N)}_{\underline{t}}(\phi)+M^{(e,N)}_{\underline{t}}(\phi)\right)^4\right]\leq c(\phi)\left(E\left[\left(\left\langle M^{(b,N)}(1)\right\rangle_K+\left\langle M^{(e,N)}(1)\right\rangle_K\right)^2\right]\right.$$

$$+\sum_{\underline{t}\le K}\left(\left|\Delta M^{(b,N)}_{\underline{t}}(1)\right|^4+\left|\Delta M^{(e,N)}_{\underline{t}}(1)\right|^4\right)\Bigg).$$

The second term in the right hand side goes to 0 as $N\to\infty$ by Lemma 3.8. The first term is bounded above by

$$CE\left[\sum_{\underline{s},\underline{t}\le K}\left(\frac{X^{(N)}_{\underline{s}}(1)X^{(N)}_{\underline{t}}(1)}{N^2}+\beta^4\sum_{x,y\in\mathbb{Z}}\frac{\left(B^{(N)}_{\underline{t}N,x}\right)^2}{N^{\frac{5}{2}}}\frac{\left(B^{(N)}_{\underline{s}N,y}\right)^2}{N^{\frac{5}{2}}}\right)\right].$$

Since $X^{(N)}_{\underline{t}}(1)$ is a martingale, $E\left[X^{(N)}_{\underline{s}}(1)X^{(N)}_{\underline{t}}(1)\right]=E\left[X^{(N)}_{\underline{s}}(1)X^{(N)}_{\underline{s}}(1)\right]$ for $\underline{s}\le\underline{t}$. Thus,

$$E\left[\sum_{\underline{s},\underline{t}\le K}\frac{X^{(N)}_{\underline{s}}(1)X^{(N)}_{\underline{t}}(1)}{N^2}\right]\le K^2E\left[\left(X^{(N)}_{\underline{K}}(1)\right)^2\right]$$

is bounded in N for all K by Lemma 3.7.

Also, we know that from the proof of Lemma 3.7 that

$$\sum_{\underline{s},\underline{t}\le K}E\left[\sum_{x,y\in\mathbb{Z}}\frac{\left(B^{(N)}_{\underline{s}N,x}\right)^2\left(B^{(N)}_{\underline{t}N,y}\right)^2}{N^5}\right]\le\frac{CK^4}{N}\left(\sqrt{KN}\right)^2<\infty.$$

□

In the end of this subsection, we complete the proof of the tightness by checking the condition (i) in Theorem 3.2. The proof follows the one in [25, p155]

Check for (i) in Theorem 3.2. Let $\varepsilon,T>0$ and $\eta(\varepsilon)>0$ (η will be chosen later). Let $K_0\subset D([0,\infty),\mathbb{R})$ be a compact set such that $\sup_N P\left(\frac{Y_{\cdot N}}{N^{\frac{1}{2}}}\in K_0^c\right)<\eta$. Let $K_T=\{y_t,y_{t-}:t\le T,y\in K_0\}$. Then, K_T is compact in $\mathbb{R}$. Clearly,

$$\sup_N P\left(\frac{Y_{Nt}}{N^{\frac{1}{2}}}\in K_T^c\text{ for some }t\le T\right)<\eta.$$

Let

$$\begin{aligned}R^{(N)}_t&=H^{(N)}_t\left(y:y(s)\in K_T^c\text{ for some }s\le t\right)\\&=\frac{1}{N}\sum_{\mathbb{x}\sim\underline{t}}\sup_{\underline{s}\le\underline{t}}\mathbf{1}_{K_T^c}\left(\frac{Y^{\mathbb{x}}_{\underline{s}N}}{N^{\frac{1}{2}}}\right).\end{aligned}$$

First, we will claim that $R^{(N)}_t$ is an $\mathcal{F}^{(N)}_{\underline{t}N}$-submartingale. Clearly, $R^{(N)}_{\cdot}$ is constant on $[\underline{t},\underline{t}+\frac{1}{N})$. So, it is enough to show that

$$E\left[R^{(N)}_{\underline{t}+\frac{1}{N}}-R^{(N)}_{\underline{t}}\middle|\mathcal{F}^{(N)}_{\underline{t}N}\right]\ge 0\ \text{ a.s.}\tag{3.10}$$

We have

$$R^{(N)}_{\underline{t}+\frac{1}{N}} - R^{(N)}_{\underline{t}} = \frac{1}{N}\sum_{\mathbb{x}\sim\underline{t}} \sup_{\underline{s}\le\underline{t}+\frac{1}{N}} \mathbf{1}_{K_T^c}\left(\frac{Y^{\mathbb{x}}_{\underline{s}N}}{N^{\frac{1}{2}}}\right) V^{\mathbb{x}} - \sup_{\underline{s}\le\underline{t}} \mathbf{1}_{K_T^c}\left(\frac{Y^{\mathbb{x}}_{\underline{s}N}}{N^{\frac{1}{2}}}\right)$$
$$\ge \frac{1}{N}\sum_{\mathbb{x}\sim\underline{t}} (V^{\mathbb{x}}-1) \sup_{\underline{s}\le\underline{t}} \mathbf{1}_{K_T^c}\left(\frac{Y^{\mathbb{x}}_{\underline{s}N}}{N^{\frac{1}{2}}}\right).$$

The conditional expectation of the last term with respect to $\mathcal{F}^{(N)}_{\underline{t}N}$ is equal to 0. Thus, (3.10) is proved. Now we apply L^1-inequality for submartingale into $R^{(N)}_{\cdot}$ so that

$$P\left(\sup_{\underline{s}\le T} X^{(N)}_{\underline{s}}(K_T^c) > \varepsilon\right) \le P\left(\sup_{t\le T} R^{(N)}_t > \varepsilon\right)$$
$$\le \varepsilon^{-1} E[R^{(N)}_{\underline{T}}]$$
$$\le \varepsilon^{-1} P\left(\frac{Y_{sN}}{N^{\frac{1}{2}}} \in K_T^c, \text{ for some } s \le T\right) \le \varepsilon$$

by taking $\eta(\varepsilon) = \varepsilon^2$. □

3.2 Identification of the limit point processes

From the lemmas in section 3.1, we know that for $\phi \in C_b^2(\mathbb{R})$, each term of

$$Z^{(N)}_{\underline{t}}(\phi) = X^{(N)}_{\underline{t}}(\phi) - \phi(0) - \int_0^{\underline{t}} X^{(N)}_{\underline{s}}(A^N\phi)ds,$$

and

$$\left\langle Z^{(N)}(\phi)\right\rangle_{\underline{t}} = \left\langle M^{(b,N)}(\phi)\right\rangle_{\underline{t}} + \left\langle M^{(e,N)}(\phi)\right\rangle_{\underline{t}} + \left\langle M^{(s,N)}(\phi)\right\rangle_{\underline{t}}$$

are C-relatively compact in $D([0,\infty),\mathbb{R})$ and we found from Lemma 3.4 that the limit point processes satisfy

$$\begin{cases} Z_t(\phi) = X_t(\phi) - \phi(0) - \displaystyle\int_0^t \frac{1}{2} X_s(\Delta\phi)ds \\ \text{is an } \mathcal{F}^X_t\text{-continuous square integrable martingale and} \\ \langle Z(\phi)\rangle_t = \displaystyle\int_0^t X_s(\phi^2)ds + M^{(e)}_t(\phi), \end{cases} \tag{3.11}$$

where $M^{(e)}_t(\phi)$ is a limit point of $M^{(e,N)}_{\underline{t}}(\phi)$. Therefore, we need to identify $M^{(e)}_t(\phi)$.

We will prove that

$$M^{(e)}_t(\phi) = 2\beta^2 \int_0^t \int_{\mathbb{R}} \phi^2(y) u(s,y)^2 dyds, \tag{3.12}$$

where $u(t,x)$ is the density of X_t with respect to the Lebesgue measure, that is $X_t(dx) = u(t,x)dx$. We can find this equation by the following rough argument.

First, we give an approximation of $X_t^{(N)}$ by some measure-valued processes which have densities. For $(t,y) \in \mathbb{R}_{\geq 0} \times \mathbb{R}$, we define $u^{(N)}(t,y)$ by

$$u^{(N)}(t,y) = \frac{B_{tN,x}^{(N)}}{2\sqrt{N}} \qquad \text{for } \underline{t} \leq t < \underline{t} + \frac{1}{N} \text{ and } y \in \left[\frac{x-1}{N^{\frac{1}{2}}}, \frac{x+1}{N^{\frac{1}{2}}}\right), \ x \in \mathbb{Z},$$

where x is an integer which particles can reach at time $\underline{t}N$, that is x satisfies $\underline{t}N - x \in 2\mathbb{Z}$. Actually, integrating $u^{(N)}(t,y)$ over $\left[\frac{x-1}{N^{\frac{1}{2}}}, \frac{x+1}{N^{\frac{1}{2}}}\right)$ for each $x \in \mathbb{Z}$, they coincide with $\frac{B_{tN,x}^{(N)}}{N}$. Thus, we can regard $u^{(N)}(t,y)$ as an approximation of $X_\cdot^{(N)}$.

Also, $\left\langle M^{(e,N)}(\phi)\right\rangle_{\underline{t}}$ can be rewritten as

$$\begin{aligned}\left\langle M^{(e,N)}(\phi)\right\rangle_{\underline{t}} &= \int_0^{\underline{t}} \sum_{x\in\mathbb{Z}} \phi\left(\frac{x}{N^{\frac{1}{2}}}\right)^2 \frac{\beta^2 \left(B_{\lfloor sN\rfloor,x}^{(N)}\right)^2}{N^{\frac{3}{2}}} ds \\ &= 2\beta^2(1+\mathcal{O}(N^{-\frac{1}{2}})) \int_0^t \int_{y\in\mathbb{R}} \phi(y)^2 u^{(N)}(s,y)^2 dyds.\end{aligned}$$

Therefore, we can conjecture that the limit point $M_t^{(e)}(\phi)$ is

$$2\beta^2 \int_0^t \int_{y\in\mathbb{R}} \phi^2(y) u(s,y)^2 dyds$$

if $u^{(N)} \Rightarrow u$ for some $u(s,y)$ in some sense. In the following, we will check that (3.12) is true.

We denote by $\tilde{X}_t^{(N)}$ new measure-valued processes associated to $u^{(N)}(\cdot,\cdot)$, that is for $\phi \in C_b^2(\mathbb{R})$,

$$\tilde{X}_t^{(N)}(\phi) = \int_{\mathbb{R}} \phi(x) u^{(N)}(t,x) dx.$$

Then, it is clear that for any $\phi \in C_b^2(\mathbb{R})$ and for any $K > 0$

$$\limsup_{N\to\infty} E\left[\sup_{t<K} \left|\tilde{X}_t^{(N)}(\phi) - X_t^{(N)}(\phi)\right|\right] = 0.$$

Thus, $\left\{\tilde{X}_\cdot^{(N)} : N \in \mathbb{N}\right\}$ is C-relative compact in $D([0,\infty), \mathcal{M}_F(\mathbb{R}))$ and there are subsequences which weakly converges to $X_\cdot$, where $X_\cdot$ is the one given in (3.11).

We will prove the following lemmas:

Lemma 3.11. *Let $X_\cdot$ be a limit point of the sequence $\{X_\cdot^{(N)} : N \in \mathbb{N}\}$. Then, the measure-valued process $\{X_t(\cdot) : 0 \leq t < \infty\}$ is almost surely absolutely continuous for all $t > 0$, that is there exists an adapted continuous function-valued process $\{u_t : t > 0\}$ such that*

$$X_t(dx) = u_t(x)dx, \quad \textit{for all } t > 0, \ P\textit{-a.s.}$$

Define a sequence of measure-valued processes $\left\{\mu_{\cdot}^{(N)}(dx) : N \in \mathbb{N}\right\}$ by

$$\mu_t^{(N)}(dx) = 2\beta^2 \int_0^t \left(u^{(N)}(s,x)\right)^2 dxds.$$

Lemma 3.12. *For any $\varepsilon > 0$ and for any $T > 0$, there exists a compact set $K^{\varepsilon,T} \subset \mathbb{R}$ such that*

$$\sup_N P\left(\sup_{t\le T} \mu_t^{(N)}\left(\left(K^{\varepsilon,T}\right)^c\right) > \varepsilon\right) < \varepsilon.$$

By using Lemma 3.11 and Lemma 3.12, we can identify the limit point processes as follows:

Identification of the limit point processes. We will verify that if $X_{\cdot}^{(N_k)}(dx) \Rightarrow u(\cdot,x)dx$ as $N_k \to \infty$, then

$$\mu_t^{(N_k)}(dx) \Rightarrow \left(2\beta^2 \int_0^t u(s,x)^2 ds\right) dx. \tag{3.13}$$

Actually, $\left\{\left(\mu_t^{(N)}(\cdot)\right)_{t\in[0,\infty)} : N \in \mathbb{N}\right\}$ are C-relatively compact in $D\left([0,\infty), \mathcal{M}_F(\mathbb{R})\right)$ if the conditions in Theorem 3.2 are satisfied. However, we have already checked them in the proof of the tightness of $\{X_{\cdot}^{(N)} : N \in \mathbb{N}\}$ and Lemma 3.12. Thus, for any $\phi \in C_b^2(\mathbb{R})$,

$$\mu_t^{(N_k)}(\phi) \Rightarrow \mu_t(\phi) \quad \text{for subsequences } N_k \to \infty.$$

Also, we may consider this convergence is almost surely by Skorohod representation theorem, that is

$$\lim_{k\to\infty} \mu_t^{(N_k)}(\phi) = \mu_t(\phi), \quad \text{a.s.} \tag{3.14}$$

Let $G_N(B,m)$ be the distributions of $u^{(N)}(t,x)$ for $B \in \mathcal{B}(\mathbb{R}_{\ge 0} \times \mathbb{R})$ and $m \in [0,\infty)$, that is

$$G_N(B,m) = \left|\left\{(t,x) \in B : u^{(N)}(t,x) \le m\right\}\right|,$$

where $|\cdot|$ represents the Lebesgue measure on $\mathbb{R}_{\ge 0} \times \mathbb{R}$. Especially,

$$G_N([0,t] \times \mathbb{R}, m) = \frac{2}{N^{\frac{3}{2}}} \sharp \left\{(n,x) : n \le \{0,\cdots,\lfloor tN \rfloor\}, x \in \mathbb{Z}, B_{n,x} \le 2m\sqrt{N}\right\}.$$

Then, the convergence of $u_t^{(N)}(\cdot)$ in (3.14) is equivalent to the convergence of the distributions $G_N(\cdot,\cdot)$.

Let $\mu_t^{(M,N)}(\cdot)$ be the truncated measure of $\mu_t^{(N)}(\cdot)$ for $M > 0$, that is

$$\mu_t^{(M,N)}(dx) = \left(2\beta^2 \int_0^t \left(u^{(N)}(s,x) \wedge M\right)^2 ds\right) dx.$$

Then, it is clear that for any bounded function $\phi \in C^2_{b,+}(\mathbb{R})$

$$\begin{aligned}
&\int_0^t \int_{\mathbb{R}} \phi(x) \left(u^{(N)}(s,x) \wedge M\right)^2 dxds \\
&\qquad = 2\int_0^t \int_{\mathbb{R}} \int_0^M \phi(x) m^2 G_N(dsdxdm) \\
&\qquad + 2\int_0^t \int_{\mathbb{R}} \int_M^\infty \mathbf{1}_{\{u^{(N)}(s,x)>M\}} \phi(x) M^2 G_N(dsdxdm).
\end{aligned}$$

The last term converges to 0 in probability as $N \to \infty$ and then $M \to \infty$. Indeed, we have that

$$\begin{aligned}
0 &\le \int_0^t \int_{\mathbb{R}} \int_M^\infty \mathbf{1}\{u^{(N)}(s,x) > M\} \phi(x) M^2 G_N(dsdxdm) \\
&\le C(\phi) \frac{\left(B^{(N)}_{n,x}\right)^2}{N^{\frac{5}{2}}} \sharp \left\{(n,x) : n \le \{0, \cdots, \lfloor tN \rfloor\}, x \in \mathbb{Z}, B_{n,x} \ge 2M\sqrt{N}\right\},
\end{aligned}$$

and the last term converges to 0 in probability by Lemma 3.9. Also, as $N_k \to \infty$ $\int_0^t \int_{\mathbb{R}} \int_0^M \phi(x) m^2 G_{N_k}(dsdxdm)$ converges almost surely to

$$\int_0^t \int_{\mathbb{R}} \int_0^M \phi(x) m^2 G(dsdxdm) = \int_0^t \int_{\mathbb{R}} \phi(x) u(s,x)^2 \mathbf{1}\{u(t,x) \le M\} dxds,$$

where $G(\cdot,\cdot,\cdot)$ is the distribution of $u(t,x)$. Thus, we have that for any $\phi \in C^2_{b,+}(\mathbb{R})$

$$\begin{aligned}
\int_0^t \int_{\mathbb{R}} \phi(x) u(s,x)^2 dxds &= \lim_{M\to\infty} \lim_{N_k\to\infty} \int_0^t \int_{\mathbb{R}} \int_0^M \phi(x) m^2 G_{N_k}(dsdxdm) \\
&\le \lim_{M\to\infty} \lim_{N_k\to\infty} \int_0^t \int_{\mathbb{R}} \phi(x) \left(u^{(N_k)}(t,x) \wedge M\right)^2 dxds \\
&\le \mu_t(\phi), \quad \text{a.s.}
\end{aligned}$$

Also, we know that for bounded function $\phi \in C^2_{b,+}(\mathbb{R})$, for any $t > 0$ and for any $\varepsilon > 0$

$$\begin{aligned}
&\lim_{M\to\infty} \sup_N P\left(\left|\int_0^t \int_{\mathbb{R}} \phi(x) \left(\left(u^{(N)}(s,x)\right)^2 - \left(u^{(N)}(s,x) \wedge M\right)^2\right) dxds\right| > \varepsilon\right) \\
&\le \lim_{M\to\infty} \sup_N P\left(\left|\int_0^t \int_{\mathbb{R}} \int_M^\infty \phi(x) m^2 G_N(dsdxdm)\right| > \varepsilon\right) \\
&= 0,
\end{aligned}$$

by Lemma 3.9. Thus, for any bounded function $\phi \in C^2_{b,+}(\mathbb{R})$

$$\begin{aligned}
\mu_t(\phi) &= \lim_{N_k\to\infty} 2\beta^2 \int_0^t \int_{\mathbb{R}} \phi(x) \left(u^{(N_k)}(t,x)\right)^2 dxds \\
&\le 2\beta^2 \int_0^t \int_{\mathbb{R}} \phi(x) u(t,x)^2 dxds, \quad \text{in probability.}
\end{aligned}$$

This is true for $\phi \in C^2_b(\mathbb{R})$. Thus, we have proved (3.13). □

Proof of Lemma 3.12. First, we remark that $M^{(e,N)}_{\underline{t}}(\phi)$ is an $\mathcal{F}^{(N)}_{\underline{t}N}$-martingale even if $\phi(x) = \mathbf{1}_K(x)$ for Borel measurable set K. Then,

$$\left\langle M^{(e,N)}(K^c)\right\rangle_{\underline{t}} = \frac{1}{N}\sum_{\underline{s}<\underline{t}}\sum_{x\in K^cN^{\frac{1}{2}}}\frac{\left(\beta B^{(N)}_{\underline{s}N,x}\right)^2}{N^{\frac{3}{2}}} = 2\beta^2(1+\mathcal{O}(N^{-\frac{1}{2}}))\mu_t(K^c)$$

is an increasing process. Thus, we have that

$$\begin{aligned}
P\left(\sup_{t\le T}\mu_t(K^c) > \varepsilon\right) &\le P\left(3\sup_{t\le T}\left\langle M^{(e,N)}(K^c)\right\rangle_{\underline{t}} > \varepsilon\right)\\
&\le \varepsilon^{-1}E\left[\frac{3}{N}\sum_{\underline{s}<T}\sum_{x\in K^cN^{\frac{1}{2}}}\frac{\left(\beta B^{(N)}_{\underline{s}N,x}\right)^2}{N^{\frac{3}{2}}}\right]\\
&\le \varepsilon^{-1}C\sum_{\underline{s}<T}\sum_{x\in K^cN^{\frac{1}{2}}}\frac{\beta^2(s\vee 1)^2}{N\sqrt{\underline{s}}}P_Y\left(Y_{\underline{s}N}=x\right)\\
&\le \varepsilon^{-1}C\beta^2\sqrt{T}\left(\sup_{\underline{s}<T}P_Y\left(Y_{\underline{s}N}\in K^cN^{\frac{1}{2}}\right)\right)\\
&\le \varepsilon,
\end{aligned}$$

by taking K as a compact set in $\mathbb{R}$ such that $C\beta^2\sqrt{K}\sup_{\underline{s}<T}P_Y\left(Y_{\underline{s}N}\in K^cN^{\frac{1}{2}}\right) \le \varepsilon^2$, where we have used Lemma 4.1 in the third inequality. □

In the rest of this subsection, we will prove Lemma 3.11.

For $\psi \in C^{1,2}_b([0,\infty)\times\mathbb{R},\mathbb{R})$, we define

$$X^{(N)}_t(\psi_t) = \sum_{\mathbb{x}\sim\underline{t}}\frac{\psi\left(t,\frac{Y^{\mathbb{x}}_{\underline{t}N}}{N^{\frac{1}{2}}}\right)}{N}, \tag{3.15}$$

where $\psi_t(x) = \psi(t,x)$. Also, we have the following equation

$$\begin{aligned}
&X^{(N)}_{\underline{t}+\frac{1}{N}}\left(\psi_{\underline{t}+\frac{1}{N}}\right) - X^{(N)}_{\underline{t}}\left(\psi_{\underline{t}}\right)\\
&= \sum_{\mathbb{x}\sim\underline{t}}\frac{\psi\left(\underline{t}+\frac{1}{N},\frac{Y^{\mathbb{x}}_{\underline{t}N+1}}{N^{\frac{1}{2}}}\right)}{N}\left(V^{\mathbb{x}}-1-\frac{\beta\xi\left(\underline{t}N,Y^{\mathbb{x}}_{\underline{t}N}\right)}{N^{\frac{1}{4}}}\right)\\
&\quad+\sum_{\mathbb{x}\sim\underline{t}}\frac{\psi\left(\underline{t}+\frac{1}{N},\frac{Y^{\mathbb{x}}_{\underline{t}N+1}}{N^{\frac{1}{2}}}\right)}{N}\frac{\beta\xi\left(\underline{t}N,Y^{\mathbb{x}}_{\underline{t}N}\right)}{N^{\frac{1}{4}}}\\
&\quad+\sum_{\mathbb{x}\sim\underline{t}}\frac{2\psi\left(\underline{t}+\frac{1}{N},\frac{Y^{\mathbb{x}}_{\underline{t}N+1}}{N^{\frac{1}{2}}}\right)-\psi\left(\underline{t}+\frac{1}{N},\frac{Y^{\mathbb{x}}_{\underline{t}N}+1}{N^{\frac{1}{2}}}\right)-\psi\left(\underline{t}+1/N,\frac{Y^{\mathbb{x}}_{\underline{t}N}-1}{N^{\frac{1}{2}}}\right)}{2N}\\
&\quad+\sum_{\mathbb{x}\sim\underline{t}}\frac{\psi\left(\underline{t}+\frac{1}{N},\frac{Y^{\mathbb{x}}_{\underline{t}N}+1}{N^{\frac{1}{2}}}\right)+\psi\left(\underline{t}+\frac{1}{N},\frac{Y^{\mathbb{x}}_{\underline{t}N}-1}{N^{\frac{1}{2}}}\right)-2\psi\left(\underline{t},\frac{Y^{\mathbb{x}}_{\underline{t}N}}{N^{\frac{1}{2}}}\right)}{2N}
\end{aligned}$$

$$
\begin{aligned}
&=: \Delta M^{(b,N)}_{\underline{t}+\frac{1}{N}}(\psi_{\underline{t}+\frac{1}{N}}) + \Delta M^{(e,N)}_{\underline{t}+\frac{1}{N}}(\psi_{\underline{t}+\frac{1}{N}}) \\
&\quad + \Delta M^{(s,N)}_{\underline{t}+\frac{1}{N}}(\psi_{\underline{t}+\frac{1}{N}}) + \Delta C^{(N)}_{\underline{t}+\frac{1}{N}}(\psi_{\underline{t}+\frac{1}{N}}).
\end{aligned}
$$

For $i = b, e, s$, $M^{(i,N)}_t(\psi_t)$ which are the sums of $\Delta M^{(i,N)}_t(\psi_t)$ up to t are martingales with respect to $\mathcal{F}^{(N)}_{\underline{t}N}$ as well as $M^{(i,N)}_{\cdot}(\phi)$ are.

We take ψ as the shift of $\frac{1}{\sqrt{2\pi t}} \exp\left(-\frac{x^2}{2t}\right)$;

$$
\psi^x_t(y) = \frac{1}{\sqrt{2\pi t}} \exp\left(-\frac{(y-x)^2}{2t}\right).
$$

Then, we have that for $\varepsilon, \varepsilon' > 0$ and $t \geq \eta > 0$

$$
\begin{aligned}
&E\left[\left(X^{(N)}_t(\psi^x_\varepsilon) - X^{(N)}_t(\psi^x_{\varepsilon'})\right)^2\right] \\
&\quad \leq \sum_{\underline{s}\leq\underline{t}} E\left[\left(\Delta M^{(b,N)}_{\underline{s}}\left(\psi^x_{t+\varepsilon-\underline{s}} - \psi^x_{t+\varepsilon'-\underline{s}}\right)\right)^2\right] && \text{(Mb)} \\
&\quad + \sum_{\underline{s}\leq\underline{t}} E\left[\left(\Delta M^{(e,N)}_{\underline{s}}\left(\psi^x_{t+\varepsilon-\underline{s}} - \psi^x_{t+\varepsilon'-\underline{s}}\right)\right)^2\right] && \text{(Me)} \\
&\quad + \sum_{\underline{s}\leq\underline{t}} E\left[\left(\Delta M^{(s,N)}_{\underline{s}}\left(\psi^x_{t+\varepsilon-\underline{s}} - \psi^x_{t+\varepsilon'-\underline{s}}\right)\right)^2\right] && \text{(Ms)} \\
&\quad + E\left[\left(\sum_{\underline{s}\leq\underline{t}} \Delta C^{(N)}_{\underline{s}}\left(\psi^x_{t+\varepsilon-\underline{s}} - \psi^x_{t+\varepsilon'-\underline{s}}\right)\right)^2\right] && \text{(C)} \\
&\quad + \left(\psi^x_{t+\varepsilon}(0) - \psi^x_{t+\varepsilon'}(0)\right)^2 && \text{(Initial term)} \\
&\quad + E\left[\left(\sum_{\mathbb{x}\sim\underline{t}} \frac{\left(\psi^x_\varepsilon - \psi^x_{t+\varepsilon-\underline{t}} - \psi^x_{\varepsilon'} + \psi^x_{t+\varepsilon'-\underline{t}}\right)\left(\frac{Y^{\mathbb{x}}_{\underline{t}N}}{N^{\frac{1}{2}}}\right)}{2\sqrt{N}}\right)^2\right] && \text{(Error term)}
\end{aligned}
$$

We will prove that

$$
\lim_{\varepsilon,\varepsilon'\to 0} \sup_{x\in\mathbb{R}, t\geq\eta} E\left[\left(X_t(\psi^x_\varepsilon) - X_t(\psi^x_{\varepsilon'})\right)^2\right] = 0, \quad \text{for any } \eta > 0. \tag{3.16}
$$

Then, we have that

$$
X_t(\psi^x_\varepsilon) = X_0(\psi^x_{t+\varepsilon}) + \tilde{M}_t(\psi^x_{t+\varepsilon-\cdot}) \tag{3.17}
$$

for a certain continuous L^2-bounded martingale $\tilde{M}_t(\psi^x_{t+\varepsilon-\cdot})$, where the martingale property of $\tilde{M}_t\left(\psi^x_{t+\varepsilon-\cdot}\right)$ is obtained by the same argument as the proof of Lemma 3.1. Also, we take L^2-limit in (3.17) as $\varepsilon \to 0$ and choose $\varepsilon_n \to 0$ so that for any t and $x \in \mathbb{R}$,

$$
\lim_{n\to\infty} X_t(\psi^x_{\varepsilon_n}) = X_0(\psi^x_t) + \tilde{M}_t(\psi^x_{t-\cdot}) \ \text{ a.s. and in } L^2. \tag{3.18}
$$

We define $u(t,x) = \liminf_{\varepsilon_n\to 0} X_t(\psi^x_{\varepsilon_n})$ for all $t > 0$, $x \in \mathbb{R}$. Standard differential theory shows that for each $t > 0$ with probability 1,

$$
X_t(dx) = u(t,x)dx + X^s_t(dx),
$$

where X_t^s is a random measure such that $X_t^s(dx) \perp dx$. Also, (3.18) implies that

$$E\left[\int_{\mathbb{R}} u(t,x)dx\right] = \int_{\mathbb{R}} X_0(\psi_t^x)dx = 1 = E\left[X_t(1)\right].$$

Thus, $E\left[X_t^s(1)\right] = 0$ and

$$X_t(dx) = u(t,x)dx, \quad \text{a.s. for all } t > 0.$$

If we show that there exists of a continuous version of u, then we can complete the proof. First, we will prove (3.16).

Clearly, for fixed $\varepsilon > 0$, $\sup_y |\psi_\varepsilon^x(y) - \psi_{t+\varepsilon-\underline{t}}^x(y)| \le \frac{C(\varepsilon)}{N}$. So (Error term) is bounded above by

$$E\left[\left(X_{\underline{t}}^{(N)}\left(\frac{C(\varepsilon)+C(\varepsilon')}{N}\right)\right)^2\right] \to 0, \quad \text{as } N \to \infty.$$

Also,

$$(\text{Initial term}) \le (\varepsilon - \varepsilon')^2 \left((t+\varepsilon) \wedge (t+\varepsilon')\right)^{-3},$$

where we have used [25, Lemma III 4.5 (a)], that is for $0 \le \delta \le p$,

$$|\psi_{t+\varepsilon}^x(y) - \psi_t^x(y)|^p \le \left(\varepsilon t^{-3/2}\right)^\delta \left(\left(\psi_{t+\varepsilon}^x(y)\right)^{p-\delta} + \left(\psi_t^x(y)\right)^{p-\delta}\right) \tag{3.19}$$

for all $x, y \in \mathbb{R}$, $t > 0$, and $\varepsilon > 0$.

Lemma 3.13. *For $\varepsilon, \varepsilon' > 0$ and $t \ge \eta > 0$,*

$$\lim_{N\to\infty} E\left[\left(\sum_{\underline{s}\le\underline{t}} \Delta C_{\underline{s}}^{(N)}\left(\psi_{t+\varepsilon-\underline{s}}^x - \psi_{t+\varepsilon'-\underline{s}}^x\right)\right)^2\right] = 0.$$

Proof.

$$\begin{aligned}
&\Delta C_{\underline{s}}^{(N)}\left(\psi_{t+\varepsilon-\underline{s}}^x\right) \\
&= \sum_{\mathbb{x}\sim\underline{s}} \frac{\psi_{t+\varepsilon-\underline{s}-\frac{1}{N}}^x\left(\frac{Y_{\underline{t}N}^{\mathbb{x}}+1}{N^{\frac{1}{2}}}\right) + \psi_{t+\varepsilon-\underline{s}-\frac{1}{N}}^x\left(\frac{Y_{\underline{t}N}^{\mathbb{x}}-1}{N^{\frac{1}{2}}}\right) - \psi_{t+\varepsilon-\underline{s}}^x\left(\frac{Y_{\underline{t}N}^{\mathbb{x}}+1}{N^{\frac{1}{2}}}\right) - \psi_{t+\varepsilon-\underline{s}}^x\left(\frac{Y_{\underline{t}N}^{\mathbb{x}}-1}{N^{\frac{1}{2}}}\right)}{2N} \\
&\quad + \sum_{\mathbb{x}\sim\underline{s}} \frac{\psi_{t+\varepsilon-\underline{s}}^x\left(\frac{Y_{\underline{t}N}^{\mathbb{x}}+1}{N^{\frac{1}{2}}}\right) + \psi_{t+\varepsilon-\underline{s}}^x\left(\frac{Y_{\underline{t}N}^{\mathbb{x}}-1}{N^{\frac{1}{2}}}\right) - 2\psi_{t+\varepsilon-\underline{s}}^x\left(\frac{Y_{\underline{t}N}^{\mathbb{x}}}{N^{\frac{1}{2}}}\right)}{2N} \\
&\le \sum_{\mathbb{x}\sim\underline{s}} \frac{1}{N^2}\left(\left.\frac{\partial\psi^x\left(t+\varepsilon-s, \frac{Y_{\underline{s}N}^{\mathbb{x}}}{N^{\frac{1}{2}}}\right)}{\partial s}\right|_{s=\underline{s}} + \mathcal{O}(N^{-\frac{1}{2}})\right) \\
&\quad + \sum_{\mathbb{x}\sim\underline{s}} \frac{1}{N^2}\left(\left.\frac{\partial^2\psi^x(t+\varepsilon-\underline{s}, y)}{2\partial y^2}\right|_{y=\frac{Y_{\underline{s}N}^{\mathbb{x}}}{N^{\frac{1}{2}}}} + \mathcal{O}(N^{-\frac{1}{2}})\right)
\end{aligned}$$

Since $\frac{\partial \psi^x(t+\varepsilon-s,y)}{\partial s} + \frac{\partial^2 \psi^x(t+\varepsilon-s,y)}{2\partial y 2} = 0$, the last equation is bounded above by

$$\left|\Delta C_{\underline{s}}^{(N)}\left(\psi^x_{t+\varepsilon-\underline{s}}\right)\right| \le C(\varepsilon,\eta)\frac{X_{\underline{s}}^{(N)}(1)}{N^{\frac{3}{2}}}.$$

Thus,

$$E\left[\left(\sum_{\underline{s}\le\underline{t}} \Delta C_{\underline{s}}^{(N)}\left(\psi^x_{t+\varepsilon-\underline{s}} - \psi^x_{t+\varepsilon'-\underline{s}}\right)\right)^2\right] \le E\left[(C(\varepsilon,\eta)+C(\varepsilon',\eta))^2 \sup_{\underline{s}\le\underline{t}}\left(\frac{X_{\underline{s}}^{(N)}(1)}{N^{\frac{1}{2}}}\right)^2\right]$$
$$\to 0 \quad \text{as } N\to\infty.$$

Indeed, for each N, $X_{\underline{s}}^{(N)}(1)$ is a martingale so that by L^2-maximum inequality and by Lemma 3.7,

$$\sup_N E\left[\sup_{\underline{s}\le\underline{t}}\left(X_{\underline{s}}^{(N)}(1)\right)^2\right] \le 4\sup_N E\left[\left\langle X^{(N)}(1)\right\rangle_{\underline{t}}\right] < \infty.$$

□

Thus, we have by Fatou's lemma that

$$E\left[\left(X_t(\psi^x_\varepsilon) - X_t(\psi^x_{\varepsilon'})\right)^2\right]$$
$$\le (\varepsilon-\varepsilon')^2(t+\varepsilon\wedge\varepsilon')^{-3}X_0(1)^2 + \varliminf_{N\to\infty}\left((Mb)+(Me)+(Ms)\right).$$

Hereafter, we will see the right hand side .

Lemma 3.14. *Suppose $\varepsilon > \varepsilon' > 0$, $t \ge \eta > 0$, and $0 < \delta < \frac{1}{2}$. Then, for any $x \in \mathbb{R}$*

$$\varliminf_{N\to\infty}(Mb) \le C_\delta(\varepsilon-\varepsilon')^\delta(t+\varepsilon')^{-\delta}.$$

Proof. By Lemma 3.6, we have that for $\varepsilon > \varepsilon' > 0$, for $t \ge \eta > 0$, and for $0 < \delta < \frac{1}{2}$

(Mb)

$$= \left(1 - \frac{1}{N^{\frac{1}{2}}}\right) E\left[\sum_{\underline{s}\le\underline{t}}\sum_{z\in\mathbb{Z}} \frac{\left(\psi^x_{t+\varepsilon-\underline{s}}\left(\frac{z}{N^{\frac{1}{2}}}\right) - \psi^x_{t+\varepsilon'-\underline{s}}\left(\frac{z}{N^{\frac{1}{2}}}\right)\right)^2}{N^2} B^{(N)}_{\underline{s}N,z}\right]$$

$$\le E_Y\left[\sum_{\underline{s}\le\underline{t}} \frac{\left(\psi^x_{t+\varepsilon-\underline{s}}\left(\frac{Y_{\underline{s}N}}{N^{\frac{1}{2}}}\right) - \psi^x_{t+\varepsilon'-\underline{s}}\left(\frac{Y_{\underline{s}N}}{N^{\frac{1}{2}}}\right)\right)^2}{N}\right],$$

and it follows from (3.19) that

$$\le \int_0^{\underline{t}} E_Y\left[\left(\frac{\varepsilon-\varepsilon'}{(t+\varepsilon'-s)^{\frac{3}{2}}}\right)^\delta\left(\left(\psi^x_{t+\varepsilon-s}\left(\frac{Y_{\underline{s}N}}{N^{\frac{1}{2}}}\right)\right)^{2-\delta} + \left(\psi^x_{t+\varepsilon'-s}\left(\frac{Y_{\underline{s}N}}{N^{\frac{1}{2}}}\right)\right)^{2-\delta}\right)\right] ds.$$

Thus, we have from the invariance principle that

$$\begin{aligned}
&\varliminf_{N\to\infty} \text{(Mb)} \\
&\le \int_0^t \int_{\mathbb{R}} \left(\frac{\varepsilon-\varepsilon'}{(t+\varepsilon'-s)^{\frac{3}{2}}}\right)^{\delta} \left(\left(\psi^x_{t+\varepsilon-s}(y)\right)^{2-\delta} + \left(\psi^x_{t+\varepsilon'-s}(y)\right)^{2-\delta}\right) \psi^0_s(y)dyds \\
&\le (\varepsilon-\varepsilon')^{\delta} \int_0^t (t+\varepsilon'-s)^{-\frac{3\delta}{2}}(2-\delta)^{-\frac{1}{2}} \left((t+\varepsilon-s)^{\frac{\delta-1}{2}} \left(\frac{2-\delta}{t+\varepsilon+(1-\delta)s}\right)^{\frac{1}{2}}\right) ds \\
&+ (\varepsilon-\varepsilon')^{\delta} \int_0^t (t+\varepsilon'-s)^{-\frac{3\delta}{2}}(2-\delta)^{-\frac{1}{2}} \left((t+\varepsilon'-s)^{\frac{\delta-1}{2}} \left(\frac{2-\delta}{t+\varepsilon'+(1-\delta)s}\right)^{\frac{1}{2}}\right) ds \\
&\le C_\delta(\varepsilon-\varepsilon')^{\delta}(t+\varepsilon')^{-\frac{1}{2}} \int_0^t (t+\varepsilon'-s)^{-\frac{1}{2}-\delta} ds \le C_\delta(\varepsilon-\varepsilon')^{\delta}(t+\varepsilon')^{-\frac{1}{2}}(t+\varepsilon')^{\frac{1}{2}-\delta},
\end{aligned}$$

where we have used the fact that $\int_{\mathbb{R}} \psi^x_s(y)\psi^0_t(y)dy = \psi^0_{t+s}(x)$ in the second inequality.

□

Lemma 3.15. *For all $x \in \mathbb{R}$, $\varepsilon > \varepsilon' > 0$, and $t \ge \eta > 0$, we have*

$$\lim_{N\to\infty} (Ms) = 0.$$

Proof. The proof is the same as the proof of Lemma 3.5. □

Lemma 3.16. *Suppose $\varepsilon > \varepsilon' > 0$, $t \ge \eta > 0$, and $0 < \delta < \frac{1}{2}$. Then, for any $x \in \mathbb{R}$*

$$\varliminf_{N\to\infty} (Me) \le C(\delta)\beta^2(t\vee 1)^2(t+\varepsilon')^{-\frac{1}{2}-\delta}(\varepsilon-\varepsilon')^{\delta}.$$

Proof. By Lemma 4.2, we have that

$$\begin{aligned}
&\text{(Me)} \\
&\le \beta^2 E\left[\sum_{\underline{s}\le\underline{t}}\sum_{z\in\mathbb{Z}} \frac{\left(\psi^x_{t+\varepsilon-\underline{s}}\left(\frac{z}{N^{\frac{1}{2}}}\right) - \psi^x_{t+\varepsilon'-\underline{s}}\left(\frac{z}{N^{\frac{1}{2}}}\right)\right)^2}{N} \frac{\left(B^{(N)}_{\underline{s}N,z}\right)^2}{N^{\frac{3}{2}}}\right] \\
&\le \beta^2 \sum_{\underline{s}\le\underline{t}}\sum_{z\in\mathbb{Z}} \frac{C(\underline{s}\vee 1)^2}{N\sqrt{\underline{s}}} \left(\psi^x_{t+\varepsilon-\underline{s}}\left(\frac{z}{N^{\frac{1}{2}}}\right) - \psi^x_{t+\varepsilon'-\underline{s}}\left(\frac{z}{N^{\frac{1}{2}}}\right)\right)^2 P\left(Y_{\underline{s}N} = z\right) \\
&\le C\beta^2(t\vee 1)^2 \int_0^t \sum_{z\in\mathbb{Z}} \frac{1}{\sqrt{s}} \left(\psi^x_{t+\varepsilon-s}\left(\frac{z}{N^{\frac{1}{2}}}\right) - \psi^x_{t+\varepsilon'-s}\left(\frac{z}{N^{\frac{1}{2}}}\right)\right)^2 P\left(Y_{\underline{s}N} = z\right) ds,
\end{aligned}$$

where we have used Lemma 4.1 in the third inequality. Let $0 < \eta' < t$. Then, we obtain by a similar argument in the proof of Lemma 3.14 that

$$\begin{aligned}
&\varliminf_{N\to\infty} \text{(Me)} \\
&\le C\beta^2(t\vee 1)^2 \left(\int_{\eta'}^t \int_{\mathbb{R}} \frac{1}{\sqrt{s}} \left(\psi^x_{t+\varepsilon-s}(y) - \psi^x_{t+\varepsilon'-s}(y)\right)^2 \psi^0_s(y)dyds\right.
\end{aligned}$$

$$+\int_0^{\eta'} \frac{\sup_y \left(\psi^x_{t+\varepsilon-s}(y)-\psi^x_{t+\varepsilon'-s}(y)\right)^2}{\sqrt{s}}ds\Bigg)$$

$$\leq C\beta^2(t\vee 1)^2\int_{\eta'}^t\int_{\mathbb{R}}\left(\frac{\varepsilon-\varepsilon'}{(t+\varepsilon'-s)^{\frac{3}{2}}}\right)^\delta\left(\left(\psi^x_{t+\varepsilon-s}(y)\right)^{2-\delta}+\left(\psi^x_{t+\varepsilon'-s}(y)\right)^{2-\delta}\right)\frac{\psi^0_s(y)}{\sqrt{s}}dyds$$

$$+C\beta^2(t\vee 1)^2\int_0^{\eta'}\left(\frac{\varepsilon-\varepsilon'}{(t+\varepsilon'-s)^{\frac{3}{2}}}\right)^\delta s^{-\frac{1}{2}}\left((t+\varepsilon-s)^{\frac{2-\delta}{2}}+(t+\varepsilon'-s)^{\frac{2-\delta}{2}}\right)ds$$

$$\leq C(\delta)\beta^2\frac{(t\vee 1)^2}{(t+\varepsilon')^{\frac{1}{2}}}(\varepsilon-\varepsilon')^\delta\int_0^{t+\varepsilon'}s^{-\frac{1}{2}}(t+\varepsilon'-s)^{-\frac{1}{2}-\delta}ds$$

$$+C(\delta)\beta^2(t\vee 1)^2(\varepsilon-\varepsilon')^\delta\int_0^{\eta'}s^{-\frac{1}{2}}\frac{(t+\varepsilon'-s)^{\frac{2-\delta}{2}}+(t+\varepsilon-s)^{\frac{2-\delta}{2}}}{(t+\varepsilon'-s)^\delta}ds$$

$$\leq C(\delta)\beta^2(t\vee 1)^2(\varepsilon-\varepsilon')^\delta\left((t+\varepsilon')^{-\frac{1}{2}-\delta}B\left(\frac{1}{2},\frac{1}{2}-\delta\right)+\eta'^{\frac{1}{2}}(t+\varepsilon)^{\frac{2-\delta}{2}}(t+\varepsilon'-\eta')^{-\delta}\right).$$

Since $\eta'>0$ is arbitrary, we have that

$$\varliminf_{N_k\to\infty}(\mathrm{Me})\leq C(\delta)\beta^2(t\vee 1)^2(t+\varepsilon')^{-\frac{1}{2}-\delta}(\varepsilon-\varepsilon')^\delta.$$

□

Thus, we showed (3.16). In the rest of this subsection, we will prove the existence of a continuous version $\tilde{u}(t,x)$ of $u(t,x)$ for all $(t,x)\in(0,\infty)\times\mathbb{R}$. Let $\tilde{X}_t(dx)=\tilde{u}(t,x)dx$. Then, we have that

$$X_t=\tilde{X}_t \text{ a.s. for each } t>0.$$

For any $\phi\in C_b^2(\mathbb{R})$, $\tilde{X}_t(\phi)$ is continuous on $(0,\infty)$ a.s. by the dominated convergence theorem and the continuity of $\tilde{u}$. Therefore,

$$\tilde{X}_t(\phi)=X_t(\phi),\quad \text{for any } t>0 \text{ a.s.}$$

and hence

$$X_t(dx)=\tilde{X}_t(dx)=\tilde{u}(t,x)dx \text{ for any } t>0 \text{ a.s.}$$

Thus, we will complete the proof of Lemma 3.11.

To prove the existence of a continuous version of $u(t,x)$, we will use the following Lemma:

Lemma 3.17. *([25, Lemma III.4.4.]) Let $I:(t_0,\infty)\times\mathbb{R}\to\mathbb{R}$ be a process on $(\Omega,\mathcal{F},P)$ such that for some $p>1$, $a,b>2$, for any $T>t_0$, there is a $c=c(T)$ so that*

$$E\left[|I(t,x)-I(t',x')|^p\right]\leq c(T)\left[|t-t'|^a+|x-x'|^b\right],$$

for all $t,t'\in(t_0,T]$, $x,x'\in[-T,T]$. Then, I has a continuous version.

Proof of the existence of a continuous version of u. From (3.17) and (3.18) we have that for $t_0>0$

$$X_{t_0}(\psi^x_{t-t_0})=X_0(\psi^x_t)+\tilde{M}_{t_0}(\psi^x_{t-\cdot})$$

and

$$u(t,x) = X_{t_0}(\psi^x_{t-t_0}) + \tilde{M}_t(\psi^x_{t-\cdot}) - \tilde{M}_{t_0}(\psi^x_{t-\cdot}).$$

Let $I(t,x) = \tilde{M}_t(\psi^x_{t-\cdot}) - \tilde{M}_{t_0}(\psi^x_{t-\cdot})$. Since $X_{t_0}(\psi^x_{t-t_0})$ is continuous in $(t_0,\infty)\times\mathbb{R}$, we will prove the existence of a continuous version of I. Let $0 < t_0 < t \le t' \le T$, $x, x' \in \mathbb{R}$. Let $p \ge 2$ be an integer. Then, it follows from the Burkholder-Davis-Gundy inequality, (3.17) and Fatou's lemma that

$$\begin{aligned}
&E\left[|I(t,x) - I(t',x'))|^{2p}\right] \\
&\le \varliminf_{\varepsilon\to 0}\varliminf_{N\to\infty} C(p,\gamma)E\left[\left(\sum_{\underline{t}_0\le\underline{s}\le\underline{t}'}\sum_{z\in\mathbb{Z}}\left(\psi^x_{t-s+\varepsilon}\left(\frac{z}{N^{\frac12}}\right)-\psi^{x'}_{t'-s+\varepsilon}\left(\frac{z}{N^{\frac12}}\right)\right)^2\frac{B^{(N)}_{\underline{s}N,z}}{N^2}\right)^p\right] \\
&+\varliminf_{\varepsilon\to 0}\varliminf_{N\to\infty} C(p,\beta)E\left[\left(\sum_{\underline{t}_0\le\underline{s}\le\underline{t}'}\sum_{z\in\mathbb{Z}}\left(\psi^x_{t-s+\varepsilon}\left(\frac{z}{N^{\frac12}}\right)-\psi^{x'}_{t'-s+\varepsilon}\left(\frac{z}{N^{\frac12}}\right)\right)^2\frac{\left(B^{(N)}_{\underline{s}N,z}\right)^2}{N^{\frac32}}\right)^p\right],
\end{aligned}$$

where we define $\psi^x_t = 0$ if $t \le 0$. By Hölder's inequality,

$$\begin{aligned}
&E\left[\left(\sum_{\underline{t}_0\le\underline{s}\le\underline{t}'}\sum_{z\in\mathbb{Z}}\left(\psi^x_{t-s+\varepsilon}\left(\frac{z}{N^{\frac12}}\right)-\psi^{x'}_{t'-s+\varepsilon}\left(\frac{z}{N^{\frac12}}\right)\right)^2\frac{B^{(N)}_{\underline{s}N,z}}{N^2}\right)^p\right] \\
&\le\left(\sum_{\underline{t}_0\le\underline{s}\le\underline{t}'}\sum_{z\in\mathbb{Z}}\left(\psi^x_{t-s+\varepsilon}\left(\frac{z}{N^{\frac12}}\right)-\psi^{x'}_{t'-s+\varepsilon}\left(\frac{z}{N^{\frac12}}\right)\right)^2\frac{E\left[\left(B^{(N)}_{\underline{s}N,z}\right)^p\right]^{\frac1p}}{N^2}\right)^p.
\end{aligned}$$

Lemma 4.1 and Corollary 4.3 yield that for any $0 < \delta < \frac12$

$$\begin{aligned}
&\varliminf_{\varepsilon\to 0}\varliminf_{N\to\infty}(\text{RHS}) \le \left(\int_{t_0}^{t'}\int_{\mathbb{R}}\frac{C(T,p)}{\sqrt{s}}\left(\psi^x_{t-s}(z)-\psi^{x'}_{t'-s}(z)\right)^2 dzds\right)^p \\
&\le\left(\int_0^{t'}\int_{\mathbb{R}}C(T,p,t_0)\left(\psi^x_{t-s}(z)-\psi^{x'}_{t'-s}(z)\right)^2 dzds\right)^p \\
&\le C(T,p,t_0)\left(|t-t'|+c(\delta)T^{\frac12-\delta}|x-x'|^\delta\right)^p,
\end{aligned}$$

where we have used Lemma III.4.5 (b) in [25] in the last line. Similarly, we can prove that

$$\begin{aligned}
&\varliminf_{\varepsilon\to 0}\varliminf_{N\to\infty} E\left[\left(\sum_{\underline{t}_0\le\underline{s}\le\underline{t}'}\sum_{z\in\mathbb{Z}}\left(\psi^x_{t-s+\varepsilon}\left(\frac{z}{N^{\frac12}}\right)-\psi^{x'}_{t'-s+\varepsilon}\left(\frac{z}{N^{\frac12}}\right)\right)^2\frac{\left(B^{(N)}_{\underline{s}N,z}\right)^2}{N^{\frac32}}\right)^p\right] \\
&\le C(T,t_0)\left(|t-t'|+c(\delta)T^{\frac12-\delta}|x-x'|^\delta\right)^p.
\end{aligned}$$

Thus, we have checked the condition of Lemma 3.17 so that there exists a continuous version of $u(t,x)$ of I and $u(t,x)$ on $(t_0,\infty)\times\mathbb{R}$ for all $t_0 > 0$. Therefore, we have completed the proof of Lemma 3.11. □

3.3 Weak uniqueness of the limit point processes

In subsection 3.1 and 3.2, we verified the existence of the limit point processes X of $\{X_t^{(N)} : t \geq 0\}$ and gave an identification of them. In the end of this section, we will prove the weak uniqueness of the limit point process X and the weak convergence of $X^{(N)}$ to X.

The main idea is to prove the existence of the "exponential dual process" $\{Y_t : t \geq 0\}$, which is $C_b^+(\mathbb{R})$-valued process independent of X satisfying

$$Y_0(x) = \phi(x), E\left[\exp\left(-\langle X_t, \phi\rangle\right)\right] = E\left[\exp\left(-\langle X_0, Y_t\rangle\right)\right] \tag{3.20}$$

for each $\phi \in C(\mathbb{R})$, where $\langle \nu, \phi\rangle = \int_{\mathbb{R}} \phi(x)\nu(dx)$ for $\nu \in \mathcal{M}_F(\mathbb{R})$ and $\phi \in C_b(\mathbb{R})$[11, Theorem 4.4.2]. The reader should be careful not to confuse the notation of quadratic variation of martingale. Also, we will identify $v \in L_+^1(\mathbb{R})$ as a finite measure on $\mathbb{R}$ by $v(x)dx$.

We introduce a set of functions on $\mathbb{R}$, rapidly decreasing continuous functions:

$$C_{rap}(\mathbb{R}) = \left\{ g \in C_b(\mathbb{R}) : |g|_p = \sup_x e^{p|x|}|g(x)| < \infty, \text{ for all } p > 0 \right\}.$$

Since it is clear that the closure of $C_{rap}^+(\mathbb{R})$, where the topology is bounded convergence pointwise, is the set of nonnegative bounded measurable functions, uniqueness for one-dimensional distributions follows by showing (3.20) for all $\phi \in C_{rap}^+(\mathbb{R})$ from Lemma II. 5.9 in [25]. Then, we will find from [11, Corollary 4.4.3] that uniqueness of the distributions for the process $\{X_t(\cdot) : t \geq 0\}$ holds.

In our case, the dual process is a solution to the local martingale problem:

$$\begin{cases} \text{For all } \varphi \in C_b^2(\mathbb{R}), \\ \quad \tilde{Z}_t(\varphi) = \langle Y_t, \varphi\rangle - \langle Y_0, \varphi\rangle + \frac{\gamma}{2}\int_0^t \langle Y_s^2, \varphi\rangle ds - \int_0^t \left\langle Y_s, \frac{1}{2}\Delta\varphi\right\rangle ds \\ \text{is an } \mathcal{F}_t^Y\text{-continuous square-integrable local martingale and} \\ \quad \langle \tilde{Z}(\varphi)\rangle_t = 2\beta^2 \int_0^t \langle Y_s^2, \varphi^2\rangle ds. \end{cases} \tag{3.21}$$

A solution to such a martingale problem is a solution to the nonlinear stochastic heat equation:

$$Y_0(x) = \phi(x), \ \frac{\partial}{\partial t} Y_t(x) = \frac{1}{2}\Delta Y_t(x) - \frac{\gamma}{2} Y_t(x)^2 + \sqrt{2}|\beta| Y_t(x)\dot{\overline{W}}(t,x). \tag{3.22}$$

The existence of nonnegative solutions to (3.22) for the case where $Y_0 \in C_{rap}^+(\mathbb{R})$ follows from [27] by using Dawson's Girsanov theorem[5]. Indeed, the existence and the uniqueness of nonnegative solutions to

$$\tilde{Y}_0(x) = \phi(x), \ \frac{\partial}{\partial t}\tilde{Y}_t(x) = \frac{1}{2}\Delta\tilde{Y}_t(x) + \sqrt{2}|\beta|\tilde{Y}_t(x)\dot{\tilde{W}}(t,x).$$

is already known, where $\tilde{W}$ is a time-space white noise independent of X[1, 27]. We denote by $P_{\tilde{Y}}$ the law of $\tilde{Y}$. Let P_Y be the probability measure with Radon-Nikodym derivatives

$$\left.\frac{dP_Y}{dP_{\tilde{Y}}}\right|_{\mathcal{F}_t^{\tilde{Y}}} = \exp\left(\frac{\gamma}{2\sqrt{2}|\beta|}\int_0^t \int_{\mathbb{R}} \tilde{Y}_s(y)\tilde{W}(ds,dy) - \frac{\gamma^2}{16\beta^2}\int_0^t \int_{\mathbb{R}} \tilde{Y}_s^2(y)dyds\right).$$

Then, under P_Y, $\tilde{Y}$ satisfies (3.21) and $\tilde{Y}$ is also a $C^+_{rap}(\mathbb{R})$-valued process. Thus, we constructed a solution to (3.21). Especially, we remark that the solutions to (3.22) satisfy for $t \geq 0$

$$Y_t(x) = \int_{\mathbb{R}} \psi^x_t(y)\phi(y)dy - \frac{\gamma}{2}\int_0^t \int_{\mathbb{R}} \psi^x_{t-s}(y)Y^2_s(y)dyds + \sqrt{2}|\beta| \int_0^t \int_{\mathbb{R}} \psi^x_{t-s}(y)Y_s(y)\tilde{W}(ds,dy), \tag{3.23}$$

where $\psi^x_t(y) = \frac{1}{\sqrt{2\pi t}} \exp\left(-\frac{(y-x)^2}{2t}\right)$ for $t > 0$ and $x \in \mathbb{R}$. We will see that solutions to (3.22) satisfy (3.20).

Before starting the proof of the uniqueness, we will look at some estimates of Y.

Lemma 3.18. *Let $\phi \in C^+_{rap}(\mathbb{R})$. Let $(\{Y_t\}_{t\geq 0}, \mathcal{F}^Y, \{\mathcal{F}^Y_t\}_{t\geq 0}, P_Y)$ be a nonnegative solution to (3.22). Then, we have that*

$$E_Y\left[\int_{\mathbb{R}} Y_t(x)dx\right] \leq \int_{\mathbb{R}} \phi(x)dx, \tag{3.24}$$

and

$$E_Y\left[\int_0^t \int_{\mathbb{R}} Y^p_s(x)dxds\right] < \infty, \tag{3.25}$$

for all $0 \leq t < \infty$ and $p \geq 1$. In particular, $\tilde{Z}_t(\varphi)$ in (3.21) is a martingale.

Proof. (3.24) is clear from (3.23). Let $0 \leq t \leq T$. Also, we have that

$$Y^p_t(x) \leq C(p,\beta)\left\{\left(\int_{\mathbb{R}} \psi^x_t(y)\phi(y)dy\right)^p + \left|\int_0^t \int_{\mathbb{R}} \psi^x_{t-s}(y)Y_s(y)\tilde{W}(ds,dy)\right|^p\right\}.$$

We define

$$T(\ell) = \inf\{t \geq 0 : \sup_x e^{|x|}|Y_t(x)| > \ell\}.$$

We remark that $T(\ell) \to \infty$ P_Y-a.s. as $\ell \to \infty$ since $Y_t \in C^+_{rap}(\mathbb{R})$ for all $t \geq 0$ P_Y-a.s. Then, we have by Hölder's inequality and the Burkholder-Davis-Gundy inequality that

$$\begin{aligned}
&E_Y\left[Y^p_t(x) : t \leq T(\ell)\right] \\
&\leq C(p,\beta)E_Y\left[\left(\int_{\mathbb{R}} \psi^x_t(y)\phi(y)dy\right)^p + \left(\int_0^t\int_{\mathbb{R}} 1\{t \leq T(\ell)\}\left(\psi^x_{t-s}(y)\right)^2 Y^2_s(y)dyds\right)^{\frac{p}{2}}\right] \\
&\leq C(p,\beta)\left(\int_{\mathbb{R}} \psi^x_t(y)\phi(y)dy\right)^p \\
&+E_Y\left[\left(\int_0^t\int_{\mathbb{R}} 1\{t \leq T(\ell)\}\left(\psi^x_{t-s}(y)\right)^2 Y^p_s(y)dyds\right)^{\frac{p}{2}}\left(\int_0^t\int_{\mathbb{R}} \left(\psi^x_{t-s}(y)\right)^2 dyds\right)^{\frac{p}{2}-1}\right]\Bigg) \\
&\leq C(p,\beta)\left(\int_{\mathbb{R}} \psi^x_t(y)\phi(y)dy\right)^p
\end{aligned}$$

$$+ C(p,\beta)t^{\frac{p-2}{4}} \int_0^t \int_{\mathbb{R}} (t-s)^{-\frac{1}{2}} \psi^x_{t-s}(y) E_Y\left[Y^p_s(y) : t \le T(\ell)\right] dyds,$$

where we have used that $p^2_s(x) \le Cs^{-\frac{1}{2}} p_s(x)$ and $\int_0^t \int_{\mathbb{R}} p^2_s(x)dxds \le Ct^{\frac{1}{2}}$. Integrating on x over $\mathbb{R}$ and letting $\nu(s,t,\ell,p) = \int_{\mathbb{R}} E_Y\left[Y^p_s(x) : t \le T(\ell)\right] dx$, then $\nu(s,t,\ell,p) < \infty$ by definition and we have that

$$\nu(t,t,\ell,p) \le C(p,\beta,T)\left(1 + \int_0^t (t-s)^{-\frac{1}{2}} \nu(s,t,\ell,p)ds\right),$$

where we have used $\sup_{t\le T} \int_{\mathbb{R}} \left(\int_{\mathbb{R}} \psi^x_t(y)\phi(y)dy\right)^p dx < \infty$. It follows from Lemma 4.1 in [18] that

$$\nu(t,t,\ell,p) \le C(p,\beta,T,Y_0) \exp\left(C(p,\beta,T,Y_0)t^{\frac{1}{2}}\right) \quad \text{for } t \le T.$$

Since the right hand side does not depend on ℓ, it follows from the monotone convergence theorem that

$$\int_{\mathbb{R}} E_Y\left[Y^p_t(x)\right] dx \le C(p,\beta,T,Y_0)$$

and

$$\int_0^T \int_{\mathbb{R}} E_Y\left[Y^p_t(x)\right] dxdt \le C(p,\beta,T,Y_0)T.$$

Also, $E[\langle \tilde{Z}(\varphi)_t \rangle] < \infty$ implies that $\tilde{Z}_t(\varphi)$ is a martingale. □

Proof of the uniqueness. Let X be a solution to the martingale problem (2.1) and we denote by $X_t(x)$ its density. Let Y be a solution to the martingale problem (3.21) constructed on the same probability space as X and independent of each other.

We denote by $\nu^t(x) = \int_{\mathbb{R}} \psi^x_t(y)\nu(dy)$ for $(t,x) \in (0,\infty) \times \mathbb{R}$ and for $\nu \in \mathcal{M}_F(\mathbb{R})$. We remark that $\nu^t \in C^\infty_{b,+}(\mathbb{R})$ for $t > 0$.

Let

$$f(\mu,s,\phi,t) = \exp\left(-\langle \mu, \phi^{T-t-s} \rangle\right)$$

for $\mu \in \mathcal{M}_F(\mathbb{R})$, $\phi \in C^+_{rap}(\mathbb{R})$, and $0 \le s,t < T$ such that $s+t < T$.

Since X_t is assumed to satisfy (2.1), we have by Itô's lemma that for $0 \le s < T-t$

$$\begin{aligned} &f(X_s,s,Y_t,t) - \exp\left(-\langle X_0, Y^{T-t}_t \rangle\right) \\ &\quad - \frac{1}{2}\int_0^s \exp\left(-\langle X_u, Y^{T-t-u}_t \rangle\right) \left\{\left\langle \gamma X_u + 2\beta^2 X^2_u, \left(Y^{T-t-u}_t\right)^2 \right\rangle\right\} du \end{aligned}$$

is an $\mathcal{F}^X_s$-martingale. Similarly, we have that for $0 \le t < T-s$

$$\begin{aligned} &f(X_s,s,Y_t,t) - \exp\left(-\langle X_s, Y^{T-s}_0 \rangle\right) \\ &\quad - \int_0^t \exp\left(-\langle X_s, Y^{T-u-s}_u \rangle\right) \left\{\left\langle \frac{1}{2}\gamma X^{T-u-s}_s, (Y_u)^2 \right\rangle\right\} du \end{aligned}$$

$$-\int_0^t \exp\left(-\langle X_s, Y_u^{T-u-s}\rangle\right)\left\{\left\langle \beta^2\left(X_s^{T-u-s}\right)^2, (Y_u)^2\right\rangle\right\} du$$

is an $\mathcal{F}_t^Y$-martingale. Let $F(s,t) = E[f(X_s, s, Y_t, t)]$. Then, we have that

$$\begin{aligned}
&F(s,t)\\
&= F(0,t) + E\left[\frac{1}{2}\int_0^s \exp\left(-\langle X_u, Y_t^{T-t-u}\rangle\right)\left\{\left\langle \gamma X_u + 2\beta^2 X_u^2, \left(Y_t^{T-t-u}\right)^2\right\rangle\right\} du\right]\\
&= F(s,0)\\
&+ E\left[\int_0^t \exp\left(-\langle X_s, Y_u^{T-s-u}\rangle\right)\left\{\left\langle \frac{1}{2}\gamma X_s^{T-u-s} + \beta^2\left(X_s^{T-u-s}\right)^2, (Y_u)^2\right\rangle\right\} du\right].
\end{aligned}$$

Therefore, it follows from Lemma 4.17 in [19] that for any $0 \le t < T$

$$\begin{aligned}
&F(0,t) - F(t,0)\\
&= \int_0^t E\left[\frac{\gamma}{2}\exp\left(-\langle X_s, Y_{t-s}^{T-t}\rangle\right)\left\{\left\langle X_s, \left(Y_{t-s}^2\right)^{T-t} - \left(Y_{t-s}^{T-t}\right)^2\right\rangle\right\}\right] ds\\
&+ \int_0^t E\left[\beta^2\exp\left(-\langle X_s, Y_{t-s}^{T-t}\rangle\right)\left\{\left\langle \left(X_s^{T-t}\right)^2, Y_{t-s}^2\right\rangle - \left\langle X_s^2, \left(Y_{t-s}^{T-t}\right)^2\right\rangle\right\}\right] ds.
\end{aligned}$$

The dominated convergence theorem shows that the left hand side converges to $F(0,T) - F(T,0)$ as $t \nearrow T$. By showing that the right hand converges to 0 as $t \nearrow T$, we will prove (3.20).

$$|(\text{RHS})| \le \int_0^t E\left[\left\langle \frac{\gamma}{2}X_s, \left|\left(Y_{t-s}^2\right)^{T-t} - Y_{t-s}^2\right|\right\rangle\right] ds \tag{3.26}$$

$$+ \int_0^t \beta^2 E\left[\left\langle \left|\left(X_s^{T-t}\right)^2 - X_s^2\right|, Y_{t-s}^2\right\rangle\right] ds \tag{3.27}$$

$$+ \int_0^t E\left[\left\langle \frac{\gamma}{2}X_s + \beta^2 X_s^2, \left|\left(Y_{t-s}^{T-t}\right)^2 - Y_{t-s}^2\right|\right\rangle\right] \tag{3.28}$$

Hölder's inequality yields

$$\begin{aligned}
&\int_0^t E\left[\left\langle X_s, \left|\left(Y_{t-s}^2\right)^{T-t} - Y_{t-s}^2\right|\right\rangle\right] ds\\
&\le \left(\int_0^t \int_{\mathbb{R}} E_X\left[X_s(y)\right]\int_{\mathbb{R}} E_Y\left[\left(Y_{t-s}(x+y) - Y_{t-s}(y)\right)^2\right]\psi_{T-t}(x)dxdyds\right)^{\frac{1}{2}}\\
&\quad\times\left(\int_0^t \int_{\mathbb{R}} E_X\left[X_s(y)\right]\int_{\mathbb{R}} E_Y\left[\left(Y_{t-s}(x+y) + Y_{t-s}(y)\right)^2\right]\psi_{T-t}(x)dxdyds\right)^{\frac{1}{2}}.
\end{aligned}$$

Also, (3.23) and the Burkholder-Davis-Gundy inequality imply that

$$\begin{aligned}
&E_Y\left[\left(Y_{t-s}(x+y) \pm Y_{t-s}(y)\right)^2\right]\\
&\le C(\gamma,\beta)\left(a_1^{\pm}(t-s,x,y) + a_2^{\pm}(t-s,x,y) + a_3^{\pm}(t-s,x,y)\right),
\end{aligned}$$

where

$$a_1^{\pm}(t,x,y) = \left(\int_{\mathbb{R}} \psi_t(z)\left(Y_0(x+y+z) \pm Y_0(y+z)\right) dz\right)^2$$

$$a_2^{\pm}(t,x,y) = E_Y\left[\left(\int_0^t\int_{\mathbb{R}}\left(\psi_{t-u}(x+y+z)\pm\psi_{t-u}(y+z)\right)Y_u(z)^2dzdu\right)^2\right]$$
$$a_3^{\pm}(t,x,y) = E_Y\left[\left(\int_0^t\int_{\mathbb{R}}\left(\psi_{t-u}(x+y+z)\pm\psi_{t-u}(y+z)\right)^2Y_u(z)^2dzdu\right)\right].$$

It follows from Hölder's inequality

$$\begin{aligned}A_1^{\pm}(t-s,y) &= \int_{\mathbb{R}} a_1^{\pm}(t-s,x,y)\psi_{T-t}(x)dx\\ &\le \int_{\mathbb{R}}\int_{\mathbb{R}}\psi_{t-s}(z)\left(Y_0(x+y+z)\pm Y_0(y+z)\right)^2\psi_{T-t}(x)dxdz.\end{aligned}$$

Since $Y_0 \in C^+_{rap}(\mathbb{R})$, $\int_{\mathbb{R}}\left(Y_0(x+y+z)-Y_0(y+z)\right)^2\psi_{T-t}(x)dx \to 0$ for any $y,z\in\mathbb{R}$ as $t\nearrow T$. Thus, $A_1^-(t-s,y)$ converges to 0 for any $y\in\mathbb{R}$ as $t\nearrow T$ and bounded above by $A_1^+(t-s,y)\le 4\sup_{x\in\mathbb{R}}Y_0(x)$ on $0\le s\le t\le T$. The dominated convergence theorem implies that

$$\int_0^t\int_{\mathbb{R}} E_X\left[X_s(y)\right]A_1^-(t-s,y)dyds \to 0, \text{ as } t\nearrow T$$

and

$$\int_0^t\int_{\mathbb{R}} E_X\left[X_s(y)\right]A_1^+(t-s,y)dyds \le C(T), \quad t\le T$$

where we have used the fact that $X_t(1)$ is a square-integrable martingale, the Burkholder-Davis-Gundy inequality, and (2.1).

Also, we have from Lemma 3.18 that

$$\begin{aligned}&A_2^+(t-s,y) = \int_{\mathbb{R}} a_2^+(t-s,x,y)\psi_{T-t}(x)dx\\ &\le \int_0^{t-s}\int_{\mathbb{R}}\int_{\mathbb{R}}\left(\psi^{x+y}_{t-s-u}(z)+\psi^{y}_{t-s-u}(z)\right)^2\psi_{T-t}(x)dxdzdu\int_0^{t-s}\int_{\mathbb{R}}E_Y[Y_u(z)^4]dzdu\\ &\le C(T,Y_0,\gamma,\beta)\end{aligned}$$

and

$$\begin{aligned}&A_2^-(t-s,y) = \int_{\mathbb{R}} a_2^-(t-s,x,y)\psi_{T-t}(x)dx\\ &\le \int_0^{t-s}\int_{\mathbb{R}}\int_{\mathbb{R}}\left(\psi^{x+y}_{t-s-u}(z)-\psi^{y}_{t-s-u}(z)\right)^2\psi_{T-t}(x)dxdzdu\int_0^{t-s}\int_{\mathbb{R}}E_Y[Y_u(z)^4]dzdu\\ &\le C(T,Y_0,\gamma,\beta)(\sqrt{T+t-2s}-\sqrt{2t-2s}-\sqrt{T-t}).\end{aligned}$$

Since $X_t(1)$ is a square-integrable martingale, we obtain by the Burkholder-Davis-Gundy inequality and the dominated convergence theorem that

$$\int_0^t\int_{\mathbb{R}} E_X\left[X_s(y)\right]A_2^-(t-s,y)dyds \to 0 \quad \text{as } t\nearrow T$$

and

$$\int_0^t \int_{\mathbb{R}} E_X\left[X_s(y)\right] A_2^+(t-s,y)dyds \le C(T), \quad t \le T.$$

Similarly,

$$\begin{aligned}
&\int_0^{t-s} \int_{\mathbb{R}} a_3^-(t-s,x,y)\psi_{T-t}(x)dxdu \\
&= \int_0^{t-s} \int_{\mathbb{R}} \int_{\mathbb{R}} \left(\psi_{t-s-u}^{x+y}(z) - \psi_{t-s-u}^{y}(z)\right)^2 E\left[Y_u^2(z)\right] \psi_{T-t}(x)dxdzdu \\
&\le \int_{\mathbb{R}} \left(\int_0^{t-s} \int_{\mathbb{R}} \left(\psi_{t-s-u}^{x+y}(z) - \psi_{t-s-u}^{y}(z)\right)^2 dzdr\right)^{1/2} \\
&\qquad \times \left(\int_0^{t-s} \int_{\mathbb{R}} \left(\psi_{t-s-u}^{x+y}(z) - \psi_{t-s-u}^{y}(z)\right)^2 E\left[Y_r^2(z)\right] dzdu\right)^{1/2} \psi_{T-t}(x)dx \\
&\le C \int_{\mathbb{R}} |x|^{1/2} \left(\int_0^{t-s} \int_{\mathbb{R}} \left(\psi_{t-s-u}^{x+y}(z)^{8/3} + \psi_{t-s-u}^{y}(z)^{8/3}\right) dzdu\right)^{3/8} \\
&\qquad\qquad \times \left(\int_0^{t-s} \int_{\mathbb{R}} E\left[Y_r^8(z)\right] dzdu\right)^{1/8} \psi_{T-t}(x)dx \\
&\le C(Y_0,T,\beta,\gamma)|T-t|^{\frac{1}{4}}
\end{aligned}$$

and

$$\begin{aligned}
&\int_0^{t-s} \int_{\mathbb{R}} \int_{\mathbb{R}} \left(\psi_{t-s-u}^{x+y}(z) + \psi_{t-s-u}^{y}(z)\right)^2 E\left[Y_u^2(z)\right] \psi_{T-t}(x)dxdzdu \\
&\le C(Y_0,T,\beta,\gamma).
\end{aligned}$$

Thus, we have that

$$\int_0^t \int_{\mathbb{R}} E_X\left[X_s(y)\right] \int_{\mathbb{R}} a_3^-(t-s,x,y)\psi_{T-t}(x)dxdyds \to 0 \quad \text{as } t \nearrow T$$

and

$$\int_0^t \int_{\mathbb{R}} E_X\left[X_s(y)\right] \int_{\mathbb{R}} a_3^+(t-s,x,y)\psi_{T-t}(x)dxdyds < \infty, \quad t \le T.$$

Therefore, we have proved that

$$\int_0^t E\left[\left\langle \frac{\gamma}{2}X_s, \left|\left(Y_{t-s}^2\right)^{T-t} - Y_{t-s}^2\right|\right\rangle\right] ds \to 0, \text{ as } t \nearrow T.$$

By a similar argument, we can prove that

$$\int_0^t E\left[\left\langle \frac{\gamma}{2}X_s + \beta^2 X_s^2, \left|\left(Y_{t-s}^{T-t}\right)^2 - Y_{t-s}^2\right|\right\rangle\right] ds \to 0, \text{ as } t \nearrow T.$$

Thus, we found that (3.26) and (3.28) converges to 0 as $t \nearrow T$.

Finally, we will show that

$$(3.27) = \int_0^t E\left[\left\langle \left|\left(X_s^{T-t}\right)^2 - X_s^2\right|, Y_{t-s}^2 \right\rangle\right] ds \to 0, \text{ as } t \nearrow T. \tag{3.29}$$

By Hölder's inequality, we have that

$$\begin{aligned}
&\int_0^t E\left[\left\langle \left|\left(X_s^{T-t}\right)^2 - X_s^2\right|, Y_{t-s}^2 \right\rangle\right] ds \\
&\leq \left(\int_0^t \int_{\mathbb{R}} E_X\left[\left(X_s^{T-t}(y) - X_s(y)\right)^2\right] E_Y\left[Y_{t-s}^2(y)\right] dyds\right)^{\frac{1}{2}} \\
&\qquad \times \left(\int_0^t \int_{\mathbb{R}} E_X\left[\left(X_s^{T-t}(y) + X_s(y)\right)^2\right] E_Y\left[Y_{t-s}^2(y)\right] dyds\right)^{\frac{1}{2}}.
\end{aligned}$$

(2.1) and the Burkholder-Davis-Gundy inequality imply that

$$\begin{aligned}
&E_X\left[\left(X_s^{T-t}(y) \pm X_s(y)\right)^2\right] \\
&\leq C\left(X_0^{T-t+s}(y) \pm X_0^s(y)\right)^2 \\
&+ CE_X\left[\int_0^s \left(\frac{\gamma}{2}X_u(x) + \beta^2 X_u^2(x)\right)\left(\psi_{T-t+s-u}^y(x) \pm \psi_{s-u}^y(x)\right)^2 dxdu\right].
\end{aligned}$$

Then, we have that

$$\begin{aligned}
&\int_0^t \int_{\mathbb{R}} E_X\left[\left(X_s^{T-t}(y) \pm X_s(y)\right)^2\right] E_Y\left[Y_{t-s}^2(y)\right] dyds \\
&\leq C\int_0^t \int_{\mathbb{R}} \left(X_0^{T-t+s}(y) \pm X_0^s(y)\right)^2 E_Y\left[Y_{t-s}^2(y)\right] dyds \\
&+ C\int_0^t \int_0^s \int_{\mathbb{R}} \int_{\mathbb{R}} E_Y\left[Y_{t-s}^2(y)\right]\left(\psi_{T-t+s-u}^y(x) \pm \psi_{s-u}^y(x)\right)^2 \\
&\qquad \times \left(E_X\left[\frac{\gamma}{2}X_u(x) + \beta^2 X_u^2(x)\right]\right) dxdudyds.
\end{aligned}$$

It follows from Hölder's inequality that

$$\begin{aligned}
&\int_0^t \int_{\mathbb{R}} \left(X_0^{T-t+s}(y) \pm X_0^s(y)\right)^2 E_Y\left[Y_{t-s}^2(y)\right] dyds \\
&= \int_0^t \int_{\mathbb{R}} \left(\int_{\mathbb{R}} \psi_{T-t+s}^y(x) \pm \psi_s^y(x) X_0(dx)\right)^2 E_Y\left[Y_{t-s}^2(y)\right] dyds \\
&\leq CX_0(1)\int_{\mathbb{R}} \left(\int_0^t \int_{\mathbb{R}} \left(\psi_{T-t+s}^y(x) \pm \psi_s^y(x)\right)^2 dyds\right)^{\frac{1}{2}} \\
&\qquad \times \left(\int_0^t \int_{\mathbb{R}} \left(\left(\psi_{T-t+s}^y(x)\right)^{\frac{8}{3}} + \left(\psi_s^y(x)\right)^{\frac{8}{3}}\right) dyds\right)^{\frac{3}{8}} \\
&\qquad \times \left(\int_0^t \int_{\mathbb{R}} E[Y_{t-s}^2(y)]^4 dyds\right)^{\frac{1}{8}} X_0(dx).
\end{aligned}$$

It is easy to see that

$$\int_0^t \int_{\mathbb{R}} \left(\psi_{T-t+s}^y(x) + \psi_s^y(x)\right)^2 dyds \leq C\sqrt{T}$$

$$\int_0^t\int_{\mathbb{R}}\left(\psi^y_{T-t-s}(x)-\psi^y_s(x)\right)^2 dyds \le C(\sqrt{2T}+\sqrt{2t}-2\sqrt{T+t}-(2-\sqrt{2})\sqrt{T-t})$$

and

$$\int_0^t\int_{\mathbb{R}}\left(\left(\psi^y_{T-t+s}(x)\right)^{\frac{8}{3}}+\left(\psi^y_s(x)\right)^{\frac{8}{3}}\right)dyds \le CT^{\frac{1}{6}}.$$

With (3.25),

$$\int_0^t\int_{\mathbb{R}}\left(X_0^{T-t+s}(y)-X_0^s(y)\right)^2 E_Y\left[Y^2_{t-s}(y)\right]dyds \to 0, \text{ as } t\nearrow T \tag{3.30}$$

and

$$\int_0^t\int_{\mathbb{R}}\left(X_0^{T-t+s}(y)+X_0^s(y)\right)^2 E_Y\left[Y^2_{t-s}(y)\right]dyds \le C(T), \quad t\le T. \tag{3.31}$$

By Fubini's theorem,

$$\begin{aligned}&\int_0^t\int_0^s\int_{\mathbb{R}}\int_{\mathbb{R}} E_Y\left[Y^2_{t-s}(y)\right]\left(\psi^y_{T-t+s-u}(x)\pm\psi^y_{s-u}(x)\right)^2\\ &\qquad\times\left(E_X\left[\frac{\gamma}{2}X_u(x)+\beta^2X_u^2(x)\right]\right)dxdudyds\\ &=\int_0^t\int_{\mathbb{R}}\left(E_X\left[\frac{\gamma}{2}X_u(x)+\beta^2X_u^2(x)\right]\right)\\ &\times\int_u^t\int_{\mathbb{R}} E_Y\left[Y^2_{t-s}(y)\right]\left(\psi^y_{T-t+s-u}(x)\pm\psi^y_{s-u}(x)\right)^2 dydsdxdu\end{aligned}$$

By a similar argument to (3.30) and (3.31),

$$\int_u^t\int_{\mathbb{R}} E_Y\left[Y^2_{t-s}(y)\right]\left(\psi^y_{T-t+s-u}(x)+\psi^y_{s-u}(x)\right)^2 dyds \le C(T),\ t\le T$$

$$\int_u^t\int_{\mathbb{R}} E_Y\left[Y^2_{t-s}(y)\right]\left(\psi^y_{T-t+s-u}(x)-\psi^y_{s-u}(x)\right)^2 dyds \to 0, \text{ for all } u\le t \text{ as } t\nearrow T.$$

Thus, we have from the dominated convergence theorem and the square-integrability of $X_t(1)$ that

$$\begin{aligned}&\int_0^t\int_0^s\int_{\mathbb{R}}\int_{\mathbb{R}} E_Y\left[Y^2_{t-s}(y)\right]\left(\psi^y_{T-t+s-u}(x)-\psi^y_{s-u}(x)\right)^2\\ &\qquad\times\left(E_X\left[\frac{\gamma}{2}X_u(x)+\beta^2X_u^2(x)\right]\right)dxdudyds \to 0, \text{ as } t\nearrow T\end{aligned}$$

and

$$\begin{aligned}&\int_0^t\int_0^s\int_{\mathbb{R}}\int_{\mathbb{R}} E_Y\left[Y^2_{t-s}(y)\right]\left(\psi^y_{T-t+s-u}(x)+\psi^y_{s-u}(x)\right)^2\\ &\qquad\times\left(E_X\left[\frac{\gamma}{2}X_u(x)+\beta^2X_u^2(x)\right]\right)dxdudyds \le C(T).\end{aligned}$$

Therefore, we have shown (3.29) and completed the proof of the uniqueness of solutions to the martingale problem (2.1). □

4 Proof of some facts

This section is devoted to the proof of some lemmas used in section 3.

Lemma 4.1. *For any $\beta > 0$ and $K > 0$, we have that*

$$\sup_N E_{Y^1Y^2}\left[\left(1+\frac{\beta^2}{N^{\frac{1}{2}}}\right)^{\sharp\left\{1\le i\le\lfloor KN\rfloor : Y_i^1=Y_i^2\right\}}\right] < \infty,$$

where Y_n^1, Y_n^2 are independent simple random walks on $\mathbb{Z}$. Also,

$$E_{Y^1Y^2}\left[\left(1+\frac{\beta^2}{N^{\frac{1}{2}}}\right)^{\sharp\left\{1\le i\le\lfloor KN\rfloor : Y_i^1=Y_i^2\right\}} : Y^1_{\lfloor KN\rfloor}=x, Y^2_{\lfloor KN\rfloor}=y\right]$$
$$\le \frac{C}{K^{\frac{1}{2}}N^{\frac{1}{2}}}M(\lfloor KN\rfloor, x, y),$$

where $M(n,x,y) = P_{Y^1}\left(Y_n^1 = x\right) \wedge P_{Y^1}\left(Y_n^1 = y\right)$ for $x, y \in \mathbb{Z}$ and $n \in \mathbb{N}$.

Proof. First, we remark that

$$\begin{aligned}
&E_{Y^1Y^2}\left[\left(1+\frac{\beta^2}{N^{\frac{1}{2}}}\right)^{\sharp\left\{1\le i\le\lfloor KN\rfloor : Y_i^1=Y_i^2\right\}}\right]\\
&= E_{Y^1Y^2}\left[\prod_{k=1}^{\lfloor KN\rfloor}\left(1+\frac{\beta^2}{N^{\frac{1}{2}}}\mathbf{1}\left\{Y_k^1=Y_k^2\right\}\right)\right]\\
&= \sum_{k=0}^{\infty}\frac{\beta^{2k}}{N^{\frac{k}{2}}}\sum_{\mathbf{i}\in D^k(\lfloor KN\rfloor)}\sum_{\mathbf{x}\in\mathbb{Z}^k}P_{Y^1Y^2}\left(Y^1_{i_j}=Y^2_{i_j}=x_j,\ \text{for } 1\le j\le k\right)\\
&= \sum_{k=0}^{\infty}\frac{\beta^{2k}}{N^{\frac{k}{2}}}\sum_{\mathbf{i}\in D^k(\lfloor KN\rfloor)}\sum_{\mathbf{x}\in\mathbb{Z}^k}P_{Y}\left(Y_{i_j}=x_j,\ \text{for } 1\le j\le k\right)^2, \qquad (4.1)
\end{aligned}$$

where $D^k(\lfloor KN\rfloor)$ is the set defined by

$$D^k(n) = \left\{\mathbf{i} = (i_j)_{j=1}^k \in \mathbb{N}^k : 1 \le i_1 < \cdots < i_k \le n\right\},$$

and the summation for $k > \lfloor KN\rfloor$ is equal to 0. By the local limit theorem

$$\begin{aligned}
&\sum_{\mathbf{i}\in D^k(\lfloor KN\rfloor)}\sum_{\mathbf{x}\in\mathbb{Z}^k}P_{Y}\left(Y_{i_j}=x_j,\ \text{for } 1\le j\le k\right)^2\\
&\le C^k\sum_{\mathbf{i}\in D^k(\lfloor KN\rfloor)}\sum_{\mathbf{x}\in\mathbb{Z}^k}\prod_{j=1}^{k}\frac{P_Y\left(Y_{i_j-i_{j-1}}=x_j-x_{j-1}\right)}{\sqrt{i_j-i_{j-1}}}\\
&\le C^k\sum_{\mathbf{i}\in D^k(\lfloor KN\rfloor)}\prod_{j=1}^{k}\frac{1}{\sqrt{i_j-i_{j-1}}}.
\end{aligned}$$

Thus, we have that

$$(4.1) \le \sum_{k=0}^{\infty}\frac{\beta^{2k}C^k}{N^k}\sum_{\mathbf{i}\in D^k(\lfloor KN\rfloor)}\prod_{j=1}^{k}\frac{1}{\sqrt{\frac{i_j}{N}-\frac{i_{j-1}}{N}}}. \qquad (4.2)$$

Since $\frac{1}{\sqrt{t-s}}$ is decreasing in $t \in (s, \infty)$, it follows that

$$\frac{1}{N^k} \prod_{j=1}^{k} \frac{1}{\sqrt{\frac{i_j}{N} - \frac{i_{j-1}}{N}}} \leq \prod_{i=1}^{k} \int_{\frac{i_{j-1}}{N}}^{\frac{i_j}{N}} \frac{dt_j}{\sqrt{t_j - \frac{i_{j-1}}{N}}},$$

and

$$\begin{aligned}
(4.2) &\leq \sum_{k=0}^{\infty} \beta^{2k} C^k \sum_{\mathbf{i} \in D^k(\lfloor KN \rfloor)} \int_{\frac{i_{k-1}}{N}}^{\frac{i_k}{N}} \cdots \int_0^{\frac{i_1}{N}} \prod_{j=1}^{k} \left(\frac{1}{\sqrt{t_j - \frac{i_{j-1}}{N}}} \right) d\mathbf{t} \\
&\leq \sum_{k=0}^{\infty} \beta^{2k} C^k \int_{0<t_1<\cdots<t_k<K} \prod_{j=1}^{k} \frac{1}{\sqrt{t_j - t_{j-1}}} d\mathbf{t} \\
&= \sum_{k=0}^{\infty} \frac{\beta^{2k} C^k (\pi K)^{\frac{k}{2}}}{\Gamma(\frac{k}{2}+1)}.
\end{aligned}$$

Since $\Gamma\left(\frac{k}{2}+1\right)$ is increase faster than a^k for any $a > 1$, the summation is finite for any β.

Also, a similar argument does hold so that

$$\begin{aligned}
&E_{Y^1Y^2}\left[\left(1 + \frac{\beta^2}{N^{\frac{1}{2}}}\right)^{\sharp\left\{1 \leq i \leq \lfloor KN \rfloor : Y_i^1 = Y_i^2\right\}} : Y^1_{\lfloor KN \rfloor} = x, Y^2_{\lfloor KN \rfloor} = y \right] \\
&= \sum_{k=1}^{\infty} \frac{\beta^{2(k-1)}}{N^{\frac{k-1}{2}}} \sum_{\mathbf{i} \in D^{k-1}(\lfloor KN \rfloor - 1)} \sum_{\mathbf{x} \in \mathbb{Z}^{k-1}} \begin{pmatrix} P_Y\left(Y_{i_j} = x_j, \text{ for } 1 \leq j \leq k-1, Y_{\lfloor KN \rfloor} = x\right) \\ \times P_Y\left(Y_{i_j} = x_j, \text{ for } 1 \leq j \leq k-1, Y_{\lfloor KN \rfloor} = y\right) \end{pmatrix} \\
&\quad + \sum_{k=1}^{\infty} \frac{\beta^{2k}}{N^{\frac{k}{2}}} \sum_{\mathbf{i} \in D^{k-1}(\lfloor KN \rfloor - 1)} \sum_{\mathbf{x} \in \mathbb{Z}^{k-1}} \begin{pmatrix} P_Y\left(Y_{i_j} = x_j, \text{ for } 1 \leq j \leq k-1, Y_{\lfloor KN \rfloor} = x\right) \\ \times P_Y\left(Y_{i_j} = x_j, \text{ for } 1 \leq j \leq k-1, Y_{\lfloor KN \rfloor} = y\right) \end{pmatrix} \\
&\leq \sum_{k=1}^{\infty} 2C^k \frac{\beta^{2(k-1)}}{N^{\frac{k-1}{2}}} \sum_{\mathbf{i} \in D^{k-1}(\lfloor KN \rfloor - 1)} \left(\prod_{j=1}^{k-1} \frac{1}{\sqrt{i_j - i_{j-1}}} \right) \frac{M(\lfloor KN \rfloor, x, y)}{\sqrt{\lfloor KN \rfloor - i_{k-1}}} \\
&\leq \sum_{k=1}^{\infty} \frac{C^k \beta^{2(k-1)}}{N^{\frac{1}{2}}} \frac{M(\lfloor KN \rfloor, x, y)}{N^{k-1}} \sum_{\mathbf{i} \in D^{k-1}(\lfloor KN \rfloor - 1)} \prod_{j-1}^{k-1} \frac{1}{\sqrt{\frac{i_j}{N} - \frac{i_{j-1}}{N}}} \frac{1}{\sqrt{K - \frac{i_{k-1}}{N}}}.
\end{aligned} \tag{4.3}$$

By the integration by parts, we have that

$$\begin{aligned}
\int_{\frac{i_{k-2}}{N}}^{\frac{i_{k-1}}{N}} \frac{1}{\sqrt{t_{k-1} - \frac{i_{k-2}}{N}} \sqrt{K - t_{k-1}}} dt_{k-1} &= \left[2 \frac{\sqrt{t_{k-1} - \frac{i_{k-2}}{N}}}{\sqrt{K - t_{k-1}}} \right]_{\frac{i_{k-2}}{N}}^{\frac{i_{k-1}}{N}} + \text{positive term} \\
&\geq 2 \frac{\sqrt{\frac{i_{k-1}}{N} - \frac{i_{k-2}}{N}}}{\sqrt{K - \frac{i_{k-1}}{N}}} \\
&\geq \frac{2}{N} \frac{1}{\sqrt{\frac{i_{k-1}}{N} - \frac{i_{k-2}}{N}} \sqrt{K - \frac{i_{k-1}}{N}}}.
\end{aligned}$$

Also, we know that

$$\sum_{\mathbf{i}\in D^{k-1}(\lfloor KN\rfloor-1)}\left(\prod_{j=1}^{k-2}\int_{\frac{i_{j-1}}{N}}^{\frac{i_j}{N}}\frac{1}{\sqrt{t_j-\frac{i_j}{N}}}dt_j\right)\left(\int_{\frac{i_{k-2}}{N}}^{\frac{i_{k-1}}{N}}\frac{1}{\sqrt{t_{k-1}-\frac{i_{k-2}}{N}}\sqrt{K-t_{k-1}}}dt_{k-1}\right)$$
$$\leq\int_{0<t_1<\cdots<t_{k-1}<K}\prod_{j=1}^{k-1}\left(\frac{1}{\sqrt{t_j-t_{j-1}}}\right)\frac{1}{\sqrt{K-t_{k-1}}}d\mathbf{t}$$
$$\leq\frac{\pi^{\frac{k}{2}}K^{\frac{k-1}{2}}}{K^{\frac{1}{2}}\Gamma\left(\frac{k-1}{2}\right)}.$$

Thus, we have that

$$\begin{aligned}&(4.3)\\&\leq\frac{P_Y\left(Y^1_{\lfloor KN\rfloor}=x\right)\wedge P_Y\left(Y^1_{\lfloor KN\rfloor}=y\right)}{(KN)^{\frac{1}{2}}}\sum_{k=1}^{\infty}\frac{C^k\beta^{2(k-1)}K^{\frac{k-1}{2}}}{\Gamma\left(\frac{k-1}{2}\right)}.\end{aligned}$$

Since the summation is finite for any $\beta\in\mathbb{R}$, the statement holds.

□

The next lemma gives us an upper bound of p-th moment of B_n for branching random walks in a random environment.

Lemma 4.2. *If $E[m^{(p)}_{n,x}]=K<\infty$ for $p\in\mathbb{N}$ and $E\left[m^{(1)}_{n,x}\right]=1$, then*

$$E\left[B_n^p\right]\leq C(p,K)n^{p-1}E_{Y^1\ldots Y^p}\left[E\left[\left(m^{(1)}_{0,0}\right)^p\right]^{\sharp\left\{1\leq i\leq n:Y_i^a=Y_i^b,a\neq b\in\{1,\cdots,p\}\right\}}\right]$$

and

$$E\left[\prod_{i=1}^{p}B_{n,x_i}\right]$$
$$\leq C(p,K)n^{p-1}E_{Y^1\ldots Y^p}\left[E\left[\left(m^{(1)}_{0,0}\right)^p\right]^{\sharp\left\{1\leq i\leq n:\substack{Y_i^a=Y_i^b,\\ a\neq b\in\{1,\cdots,p\}}\right\}}:Y_n^i=x_i\ \textit{for}\ 1\leq i\leq p\right].$$

Before starting a proof, we give another representation of B_n. Let $\{V^{\mathbb{x}}_{n,x}:\mathbb{x}\in\mathcal{T},(n,x)\in\mathbb{N}\times\mathbb{Z}^d\}$ be $\mathbb{N}$-valued random variables with $P\left(V^{\mathbb{x}}_{n,x}=k\middle|\,\omega\right)=q_{n,x}(k)$. Let $\{X^{\mathbb{x}}_{n,x}:\mathbb{x}\in\mathcal{T},(n,x)\in\mathbb{N}\times\mathbb{Z}^d\}$ be i.i.d. random variables with $P(X^{\mathbb{x}}_{n,x}=e)=\frac{1}{2d}$ for $e=\pm e_j$, $j=1,\cdots,d$ where e_j are unit vector on $\mathbb{Z}^d$. $V^{\mathbb{x}}_{n,x}$ denotes the number of offsprings of $\mathbb{x}$ if $\mathbb{x}$ locates at x at time n and $X^{\mathbb{x}}_{n,x}$ denotes the step of $\mathbb{x}$ if it locates at x at time n.

We consider the event {particle $\mathbb{y}$ exists and locates at site y at time $|\mathbb{y}|=n$} and its indicator function

$$B^{\mathbb{y}}_{n,y}=\mathbf{1}\left\{\text{particle }\mathbb{y}\text{ exists and locates at site }y\text{ at time }|\mathbb{y}|=n\right\}.$$

Then, it is clear that

$$B_{0,x}^{\mathbb{x}} = \delta_{x,\mathbb{x}} = \begin{cases} 1 & \text{if } x = 0 \text{ and } \mathbb{x} = \mathbf{1}, \\ 0 & \text{otherwise,} \end{cases}$$

$$\begin{aligned} B_{n,y}^{\mathbb{y}} &= \sum_{x} B_{n-1,x}^{\mathbb{x}} \mathbf{1}\left\{X_{n-1,x}^{\mathbb{x}} = y - x, V_{n-1,x}^{\mathbb{x}} \geq \mathbb{y}/\mathbb{x} \geq 1\right\} \\ &= \sum_{0 \to y} \sum_{\mathbf{1} \to \mathbb{y}} \prod_{i=0}^{n-1} \mathbf{1}\left\{X_{i,y_i}^{\mathbb{y}_i} = y_{i+1} - y_i, V_{i,y_i}^{\mathbb{y}_i} \geq \mathbb{y}_{i+1}/\mathbb{y}_i \geq 1\right\}, \end{aligned}$$

and

$$B_{n,y} = \sum_{\mathbb{y}} \sum_{0 \to y} \sum_{\mathbf{1} \to \mathbb{y}} \prod_{i=0}^{n-1} \mathbf{1}\left\{X_{i,y_i}^{\mathbb{y}_i} = y_{i+1} - y_i, V_{i,y_i}^{\mathbb{y}_i} \geq \mathbb{y}_{i+1}/\mathbb{y}_i \geq 1\right\}.$$

We introduce new Markov chain $\mathbf{Y} = (Y, \mathbb{Y})$ on $\mathbb{Z}^d \times \mathcal{T}$ which are determined by

$$Y_0 = 0, \mathbb{Y}_0 = \mathbf{1} \in T_0.$$

$$P_{Y\mathbb{Y}}\left(\begin{smallmatrix} Y_{n+1}=y, \\ \mathbb{Y}_{n+1}=\mathbb{y} \end{smallmatrix} \middle| \begin{smallmatrix} Y_n=x, \\ \mathbb{Y}_n=\mathbb{x} \end{smallmatrix}\right) = \begin{cases} \frac{1}{2d} \sum_{k \geq \mathbb{y}/\mathbb{x}} q(k) & \text{if } |y - x| = 1, \mathbb{y}/\mathbb{x} < \infty, \\ 0 & \text{otherwise,} \end{cases}$$

where $q(k) = E[q_{n,x}(k)]$. Let $A_{n,x,y}^{\mathbb{x},\mathbb{y}} = \mathbf{1}\left\{X_{n,x}^{\mathbb{x}} = y - x, V^{\mathbb{x}} \geq \mathbb{y}/\mathbb{x}\right\}$. Then, we have the following representation of $B_{n,y}$ [22]:

$$B_{n,y} = E_{Y\mathbb{Y}}\left[\prod_{i=0}^{n-1} \frac{A_{i,Y_i,Y_{i+1}}^{\mathbb{Y}_i,\mathbb{Y}_{i+1}}}{E\left[A_{i,Y_i,Y_{i+1}}^{\mathbb{Y}_i,\mathbb{Y}_{i+1}}\right]} : Y_n = y\right],$$

and also

$$E\left[\prod_{i=1}^{p} B_{n,x_i}\right] = E_{\mathbf{Y}^1 \cdots \mathbf{Y}^p}\left[\prod_{i=0}^{n-1} E\left[\frac{\prod_{j=1}^{p} A_{i,Y_i^j,Y_{i+1}^j}^{\mathbb{Y}_i^j,\mathbb{Y}_{i+1}^j}}{\prod_{j=1}^{p} E\left[A_{i,Y_i^j,Y_{i+1}^j}^{\mathbb{Y}_i^j,\mathbb{Y}_{i+1}^{j+1}}\right]}\right] : Y_n^i = x_i \text{ for } 1 \leq i \leq p\right]$$

$$E\left[B_n^p\right] = E_{\mathbf{Y}^1 \cdots \mathbf{Y}^p}\left[\prod_{i=0}^{n-1} E\left[\frac{\prod_{j=1}^{p} A_{i,Y_i^j,Y_{i+1}^j}^{\mathbb{Y}_i^j,\mathbb{Y}_{i+1}^j}}{\prod_{j=1}^{p} E\left[A_{i,Y_i^j,Y_{i+1}^j}^{\mathbb{Y}_i^j,\mathbb{Y}_{i+1}^{j+1}}\right]}\right]\right],$$

where $\mathbf{Y}^i = (Y^i, \mathbb{Y}^i)$ are independent copies of $\mathbf{Y} = (Y, \mathbb{Y})$.

Proof of Lemma 4.2. We remark the following facts:

i) If $y \neq y'$, then $A_{i,x,y}^{\mathbb{x},\mathbb{y}} A_{i,x,y'}^{\mathbb{x},\mathbb{y}'} = 0$ almost surely. Especially, for $\left\{\mathbf{Y}_i^j : i = 0, \cdots, n\right\}$ and $\left\{\mathbf{Y}_i^{j'} : i = 0, \cdots, n\right\}$, if there exists an i such that $\mathbf{Y}_i^j = \mathbf{Y}_i^{j'}$ and $Y_{i+1}^j \neq Y_{i+1}^{j'}$, then

$$\prod_{i=0}^{n-1} E\left[\frac{\prod_{j=1}^{p} A_{i,Y_i^j,Y_{i+1}^j}^{\mathbb{Y}_i^j,\mathbb{Y}_{i+1}^j}}{\prod_{j=1}^{p} E\left[A_{i,Y_i^j,Y_{i+1}^j}^{\mathbb{Y}_i^j,\mathbb{Y}_{i+1}^{j+1}}\right]}\right] = 0,$$

almost surely.

ii) If $\mathbb{y}/\mathbb{x} = k$, $\mathbb{y}'/\mathbb{x} = \ell$, and $k \le \ell$, then $A^{\mathbb{x},\mathbb{y}}_{i,x,y} A^{\mathbb{x},\mathbb{y}'}_{i,x,y} = A^{\mathbb{x},\mathbb{y}'}_{i,x,y}$ almost surely.

iii) If $\{\mathbb{x}^j : j = 1, \cdots, p\}$ are different from each other and $\mathbb{y}^j/\mathbb{x}^j = k_j$, then $E\left[\prod_{j=1}^p A^{\mathbb{x}^j,\mathbb{y}^j}_{i,x^j,y^j}\right] = \left(\frac{1}{2d}\right)^p \sum_{s_1 \ge k_1} \cdots \sum_{s_p \ge k_p} E\left[\prod_{j=1}^p q_{i,x^j}(s_j)\right]$.

Thus, the possible cases are the followings:

$$E\left[E_{\mathbf{Y}^1 \cdots \mathbf{Y}^p}\left[\frac{\prod_{j=1}^p A^{\mathbb{Y}^j_i,\mathbb{Y}^j_{i+1}}_{i,Y^j_i,Y^j_{i+1}}}{\prod_{j=1}^p E\left[A^{\mathbb{Y}^j_i,\mathbb{Y}^j_{i+1}}_{i,Y^j_i,Y^j_{i+1}}\right]} \middle| Y^j_i = x^j, \mathbb{Y}^j_i = \mathbb{x}^j \text{ for } j = 1, \cdots p\right]\right]$$
$$= \begin{cases} 1 \quad x^j \text{ are different from each others,} \\ E\left[\prod_{j=1}^p m^{(1)}_{i,x^j}\right] \quad \text{if } \mathbb{x}^j \text{ are different from each others,} \\ (A), \end{cases}$$

where (A) is the other case described as below.

We divide the set $\{1, \cdots, p\}$ into the disjoint union such that

$$\{1, \cdots, p\} = \coprod_{k=j_1}^{j_p} I_k, \tag{4.4}$$

where $I_k = \{j \in \{1, \cdots, p\} : \mathbb{x}^j = \mathbb{x}^k\}$ and $j_1, \cdots j_p$ is the set of index of equivalence class I_k. For $\mathbb{y}^j/\mathbb{x}^j = k_j$, we set $K_{j_\ell} = \min\{k_j : j \in I_{j_\ell}\}$. Then, we have that

$$E\left[E_{\mathbf{Y}^1 \cdots \mathbf{Y}^p}\left[\frac{\prod_{j=1}^p A^{\mathbb{Y}^j_i,\mathbb{Y}^j_{i+1}}_{i,Y^j_i,Y^j_{i+1}}}{\prod_{j=1}^p E\left[A^{\mathbb{Y}^j_i,\mathbb{Y}^j_{i+1}}_{i,Y^j_i,Y^j_{i+1}}\right]} \mathbf{1}\left\{\begin{smallmatrix} \mathbb{Y}^j_{i+1} = \mathbb{y}^j \\ \text{for } j=1,\cdots,p \end{smallmatrix}\right\} \middle| \begin{smallmatrix} Y^j_i = x^j, \mathbb{Y}^j_i = \mathbb{x}^j \\ \text{for } j=1,\cdots,p \end{smallmatrix}\right]\right]$$
$$= E\left[\prod_{\ell=j_1}^{j_p}\left(\sum_{k \ge K_\ell} q_{i,x^\ell}(k)\right)\right].$$

By the above argument, we find that $\mathbf{Y}^1, \cdots, \mathbf{Y}^P$ evolves according the following steps:

i) First, the set process $\{S(m) : m = 0, \cdots, n\}$ starts from the set $I^{(0)} = \{1, \cdots, p\}$ until time $i^{(1)}$, and then it splits into some sets $I^{(1,1)}, \cdots, I^{(1,k^{(1)})}$. ($i^{(1)}$ is the last time when $\mathbf{Y}^j_i$ coincide and $I^{(1,1)}, \cdots, I^{(1,k^{(1)})}$ are the equivalence class defined in (4.4) for $\mathbb{Y}^j_{i^{(1)}+1}$).

ii) When the set process $S(m) = \{I^{(\ell,1)}, \cdots, I^{(\ell,k^{(\ell)})}\}$, it jumps to the new sets $\{I^{(\ell+1,1)}, \cdots, I^{(\ell+1,k^{(\ell+1)})}\}$ where each $I^{(\ell+1,r)}$ is a partition of some set of $I^{(\ell,1)}, \cdots I^{(\ell,k^{(\ell)})}$ at some time $i^{(\ell+1)}$. ($\mathbf{Y}^{(j)}$, $j \in I^{(\ell,s)}$ for each $s = 1, \cdots, k^{(\ell)}$ coincides until time $i^{(\ell+1)}$ and $\mathbb{Y}^j_{i^{(\ell+1)}+1} \ne \mathbb{Y}^{j'}_{i^{(\ell+1)}+1}$ for some $j, j' \in I^{(\ell,k)}$ for some k).

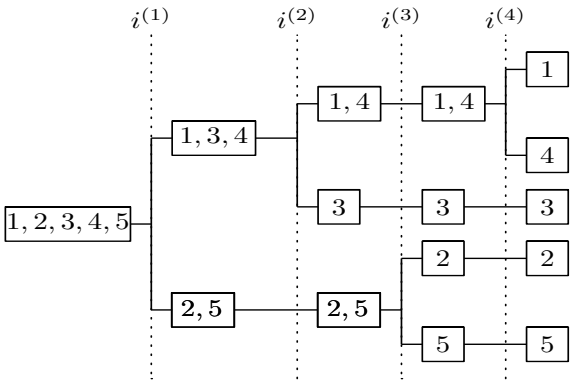

Figure 1: When $p = 5$, $I^{(0)} = \{1,2,3,4,5\}$. In this figure, $I^{(1,1)} = \{1,3,4\}$, $I^{(1,2)} = \{2,5\}$, $I^{(2,1)} = \{1,4\}$, $I^{(2,2)} = \{3\}$, and $I^{(2,3)} = \{2,5\}$.

iii) If $S(m) = \{\{1\},\cdots,\{p\}\}$, then $S(m) = S(m')$ for $m' \geq m$.

First, we remark that the combination of $i^{(1)},\cdots,i^{(p-1)}$ (it may stops for less steps) are at most n^p-th order. Also,

$$E\left[E_{\mathbf{Y}^1\cdots\mathbf{Y}^p,S}\left[\frac{\prod_{j=1}^p A_{i,Y_i^j,Y_{i+1}^j}^{\mathbb{Y}_i^j,\mathbb{Y}_{i+1}^j}}{\prod_{j=1}^p E\left[A_{i,Y_i^j,Y_{i+1}^j}^{\mathbb{Y}_i^j,\mathbb{Y}_{i+1}^j}\right]}\mathbf{1}\left\{i^{(\ell)}=i\right\}\middle|\begin{array}{c}Y_i^j=x^j,\mathbb{Y}_i^j=\mathbb{x}^j\\ \text{for } j=1,\cdots,p\end{array}\right]\right]$$
$$\leq C(p)K,$$

and

$$E\left[E_{\mathbf{Y}^1\cdots\mathbf{Y}^p,S}\left[\frac{\prod_{j=1}^p A_{i,Y_i^j,Y_{i+1}^j}^{\mathbb{Y}_i^j,\mathbb{Y}_{i+1}^j}}{\prod_{j=1}^p E\left[A_{i,Y_i^j,Y_{i+1}^j}^{\mathbb{Y}_i^j,\mathbb{Y}_{i+1}^j}\right]}\mathbf{1}\left\{\begin{array}{c}i^{(\ell)}\neq i,\\ \text{for } \ell=1,\cdots,p\end{array}\right\}\middle|\begin{array}{c}Y_i^j=x^j,\mathbb{Y}_i^j=\mathbb{x}^j\\ \text{for } j=1,\cdots,p\end{array}\right]\right]$$
$$\leq \prod_{k\in\mathcal{K}} E\left[\left(m_{i,x^k}\right)^{\sharp\left\{j:x^j=x^k\right\}}\right] \leq \prod_{k\in\mathcal{K}} E\left[(m_{i,x^k})^p\right]^{\sharp\{j:x_j=x_k\}/p}$$
$$\leq E\left[(m_{i,x^k})^p\right]^{\mathbf{1}\left\{x^j=x^k,\ \text{for some } j\neq k\right\}},$$

where $\mathcal{K}$ be the set of index for equivalence class $\left\{j : x^j = x^k\right\}$.

Thus, we have that

$$E\left[B_n^P\right] \leq C(p,K)n^{p-1}E_{\mathbf{Y}^1\cdots\mathbf{Y}^p}\left[E\left[(m_{n,x})^p\right]^{\sharp\left\{i\leq n:Y_i^j=Y_i^{j'}\ \text{ for } j\neq j'\in\{1,\cdots,p\}\right\}}\right].$$

The latter part of Lemma 4.2 can be proved by the same argument.

□

Corollary 4.3. *Under the same assumption in Lemma 4.2,*

$$E\left[\prod_{j=1}^q\prod_{i=1}^{p_j} B_{n,x_{(j,i)}}^{(j)}\right]$$

$$\leq C(\mathbf{p},K)n^{\left(\sum_{j=1}^{q} p_j - q\right)}$$
$$\times E_{(\mathbf{Y}^{j,i})}\left[E\left[(m_{0,0})^{\sum_{j=1}^{q} p_j}\right]^{\sharp\left\{\substack{k\leq n: Y_k^{j_1,i_1}=Y_k^{j_2,i_2},\ for \\ (j_1,i_1)\neq(j_2,i_2)\in\{(j,i):j=1,\cdots,q,i=1,\cdots,p_j\}}\right\}} : Y_n^{(j,i)} = x_{j,i}\right],$$

where $B_{n,x}^{(j)}$ is the number of particles from initial particle j at site x at time n.

Proof. If we regard $i^{(1)} = -1$ and $S(0) = \{\{1,\cdots,p_1\},\cdots,\{\sum_{j=1}^{q-1} p_j + 1,\cdots,\sum_{j=1}^{q} p_j\}\}$, then $S(m)$ stops at $\{\{1\},\cdots,\{\sum_{j=1}^{q} p_j\}\}$ at most $\sum_{j=1}^{q} p_j - q$ jumps. □

Acknowledgement: The author is very grateful to the referees for their suggestions, especially on the explicit form on the dual processes. Also, he thanks the associated editor for his fruitful comments. He thanks Prof. Yoshida for his careful reading of this paper. He thanks Prof. Mytnik for the fruitful discussion. This work was partially supported by JSPS Grant-in-Aid for Young Scientists(Start-up) 24840007.

References

[1] L. Bertini and G. Giacomin. Stochastic Burgers and KPZ equations from particle systems. *Comm. Math. Phys.*, Vol. 183, No. 3, pp. 571–607, 1997.

[2] M. Birkner, J. Geiger, and G. Kersting. Branching processes in random environment: a view on critical and subcritical cases. *Interacting stochastic systems*, pp. 269–291, 2005.

[3] D.L. Burkholder. Distribution function inequalities for martingales. *The Annals of Probability*, Vol. 1, pp. 19–42, 1973.

[4] D.A. Dawson. Stochastic evolution equations and related measure processes. *Journal of Multivariate Analysis*, Vol. 5, No. 1, pp. 1–52, 1975.

[5] D.A. Dawson. Geostochastic calculus. *The Canadian Journal of Statistics*, Vol. 6, No. 2, pp143–168, 1978

[6] D.A. Dawson. Measure-valued Markov processes. In *École d'Été de Probabilités de Saint-Flour XXI—1991*, Vol. 1541 of *Lecture Notes in Math.*, pp. 1–260. Springer, Berlin, 1993.

[7] D.A. Dawson and E.A. Perkins. *Historical processes.* No. 454. American Mathematical Soc., 1991.

[8] E.B. Dynkin. *Diffusions, superdiffusions and partial differential equations*, Vol. 50 of *American Mathematical Society Colloquium Publications.* American Mathematical Society, Providence, RI, 2002.

[9] E.B. Dynkin. *Superdiffusions and positive solutions of nonlinear partial differential equations*, Vol. 34 of *University Lecture Series.* American Mathematical Society, Providence, RI, 2004. Appendix A by J.-F. Le Gall and Appendix B by I. E. Verbitsky.

[10] A.M. Etheridge. *An introduction to superprocesses*, Vol. 20 of *University Lecture Series*. American Mathematical Society, Providence, RI, 2000.

[11] S.N. Ethier and T.G. Kurtz. *Markov processes: characterization and convergence*, Vol. 282. Wiley. com, 2009.

[12] H. Heil and M. Nakashima. A remark on localization for branching random walks in random environment. *Electron. Commun. Prob*, Vol. 16, pp. 323–336, 2011.

[13] H. Heil, M. Nakashima, and N. Yoshida. Branching random walks in random environment are diffusive in the regular growth phase. *Electronic Journal of Probability*, Vol. 16, pp. 1318–1340, 2011.

[14] N. Konno and T. Shiga. Stochastic partial differential equations for some measure-valued diffusions. *Probability Theory and Related Fields*, Vol. 79, No. 2, pp. 201–225, 1988.

[15] J.F. Le Gall. *Spatial branching processes, random snakes and partial differential equations*. Lectures in Mathematics ETH Zürich. Birkhäuser Verlag, Basel, 1999.

[16] J.F. Le Gall, E.A Perkins, and S.J Taylor. The packing measure of the support of super-Brownian motion. *Stochastic processes and their applications*, Vol. 59, No. 1, pp. 1–20, 1995.

[17] C. Mueller, L. Mytnik, and E.A. Perkins. Nonuniqueness for a parabolic SPDE with 3/4-ε-Hölder diffusion coefficients. *to appear in the Annals of Probability*, 2013.

[18] C. Mueller and E.A. Perkins. The compact support property for solutions to the heat equation with noise. *Probability Theory and Related Fields*, Vol. 44, pp. 325–358, 1992.

[19] L. Mytnik. Superprocesses in random environments. *The Annals of Probability*, Vol. 24, No. 4, pp. 1953–1978, 1996.

[20] L. Mytnik. Weak uniqueness for the heat equation with noise. *The Annals of Probability*, Vol. 26, No. 3, pp. 968–984, 1998.

[21] L. Mytnik and E.A. Perkins. Pathwise uniqueness for stochastic heat equations with hölder continuous coefficients: the white noise case. *Probability theory and related fields*, Vol. 149, No. 1-2, pp. 1–96, 2011.

[22] M. Nakashima. Almost sure central limit theorem for branching random walks in random environment. *The Annals of Applied Probability*, Vol. 21, No. 1, pp. 351–373, 2011.

[23] E.A. Perkins. A space-time property of a class of measure-valued branching diffusions. *Trans. Amer. Math. Soc.*, Vol. 305, No. 2, pp. 743–795, 1988.

[24] E.A. Perkins. The Hausdorff measure of the closed support of super-Brownian motion. Vol. 25, No. 2, pp. 205–224, 1989.

[25] E.A. Perkins. Part ii: Dawson-Watanabe superprocesses and measure-valued diffusions. *Lectures on Probability Theory and Statistics*, pp. 125–329, 2002.

[26] M. Reimers. One dimensional stochastic partial differential equations and the branching measure diffusion. *Probability Theory and Related Fields*, Vol. 81, No. 3, pp. 319–340, 1989.

[27] Tokuzo Shiga. Two contrasting properties of solutions for one-dimensional stochastic partial differential equations. *Canad. J. Math.*, Vol. 46, No. 2, pp. 415–437, 1994.

[28] Y. Shiozawa. Central limit theorem for branching Brownian motions in random environment. *Journal of Statistical Physics*, Vol. 136, No. 1, pp. 145–163, 2009.

[29] Y. Shiozawa. Localization for branching Brownian motions in random environment. *Tohoku Mathematical Journal*, Vol. 61, No. 4, pp. 483–497, 2009.

[30] S. Watanabe. A limit theorem of branching processes and continuous state branching processes. *Kyoto Journal of Mathematics*, Vol. 8, No. 1, pp. 141–167, 1968.

[31] N. Yoshida. Central limit theorem for branching random walks in random environment. *The Annals of Applied Probability*, Vol. 18, No. 4, pp. 1619–1635, 2008.